DVP-S300/S305/S315

RMT-D103E/105A/105P

SERVICE MANUAL

Self Diagnostics Supported model

US Model
DVP-S300

E Model
DVP-S300/S305

AEP Model
DVP-S315

UK Model
DVP-S315

Chinese Model
DVP-S305

Taiwan Model
DVP-S305

Singapore Model
DVP-S305

SPECIFICATIONS

CD/DVD player

Signal format system PAL/ (NTSC): DVP-A305/S315
NTSC : DVP-S300

Audio characteristics

Frequncy response DVD (PCM 96 kHz): 2 Hz to 44 kHz (+0.5 dB, –2.0 dB)
DVD (PCM 48 kHz): 2 Hz to 22 kHz (±0.5 dB)
CD: 2 Hz to 20 kHz (±0.5 dB)

Signal-to-noise ratio More than 107 dB (LINE OUT (AUDIO) connectors only)

Harmonic distortion Less than 0.0028%

Dynamic range More than 100 dB (DVD)
More than 97 dB (CD)

Wow and flutter Less than detected value (±0.001% W PEAK)

Outputs and inputs

	jack type	Output level	Load impedance
LINE OUT (AUDIO)	Phono jacks	2 Vrms (at 50 kilohms)	Over 10 kilohms
DIGITAL OUT (OPTICAL)	Optical output connector	–18 dBm	Wave length: 660 nm
DIGITAL OUT (COAXIAL)	Phono jacks	0.5 Vp-p	75 ohms terminated
LINE OUT (VIDEO)	Phono jack	1.0 Vp-p	75 ohms, sync negative
S VIDEO OUT	4-pin mini DIN	Y: 1.0 Vp-p	75 ohms, sync negative
		C: 0.3 Vp-p	75 ohms terminated
PHONES	Phone jack	12 mW	32 ohms

General

Power requirements 220 – 240 V AC, 50 Hz: DVP-S305/S315
120 V AC, 60 Hz: DVP-S300

Power consumption 22 W: DVP-S305/S315
20 W: DVP-S300

Dimensions (approx.) 430 × 95 × 325 mm (17 × $3^3/_4$ × $12^7/_8$ in.) (w/h/d): DVP-S300/S315
430 × 95 × 330 mm (w/h/d): DVP-S305 incl. projecting parts

Mass (approx.) 4.0 kg (8 lb 13 oz)

Operating temperature 41 °F to 95 °F (5 °C to 35°C)

Operating humidity 5% to 90%

Supplied accessories

- Audio/video/S-link connecting cord (1) (DVP-S300: US)
- Audio/Video connecting cord (1) (DVP-S300: E/S305/S315)
- S video cable (1)
- Remote commander (remote) RMT-D103E (1) (DVP-S305)
- Remote commander (remote) RMT-D105A (DVP-S300)
- Remote commander (remote) RMT-D105P (DVP-S315)
- sony R6 (size AA) batteries (2)

Design and specifications are subject to change without notice.

DVD VIDEO COMPACT disc DIGITAL VIDEO

CD/DVD PLAYER

MICROFILM

SONY®

SAFETY CHECK-OUT

After correcting the original service problem, perform the following safety checks before releasing the set to the customer:

1. Check the area of your repair for unsoldered or poorly-soldered connections. Check the entire board surface for solder splashes and bridges.
2. Check the interboard wiring to ensure that no wires are "pinched" or contact high-wattage resistors.
3. Look for unauthorized replacement parts, particularly transistors, that were installed during a previous repair. Point them out to the customer and recommend their replacement.
4. Look for parts which, though functioning, show obvious signs of deterioration. Point them out to the customer and recommend their replacement.
5. Check the line cord for cracks and abrasion. Recommend the replacement of any such line cord to the customer.
6. Check the B+ voltage to see it is at the values specified.
7. Check the antenna terminals, metal trim, "metallized" knobs, screws, and all other exposed metal parts for AC leakage. Check leakage as described below.

LEAKAGE TEST

The AC leakage from any exposed metal part to earth ground and from all exposed metal parts to any exposed metal part having a return to chassis, must not exceed 0.5 mA (500 microamperes). Leakage current can be measured by any one of three methods.

1. A commercial leakage tester, such as the Simpson 229 or RCA WT-540A. Follow the manufacturers' instructions to use these instruments.
2. A battery-operated AC milliammeter. The Data Precision 245 digital multimeter is suitable for this job.
3. Measuring the voltage drop across a resistor by means of a VOM or battery-operated AC voltmeter. The "limit" indication is 0.75V, so analog meters must have an accurate low-voltage scale. The Simpson 250 and Sanwa SH-63Trd are examples of a passive VOM that is suitable. Nearly all battery operated digital multimeters that have a 2V AC range are suitable. (See Fig. A)

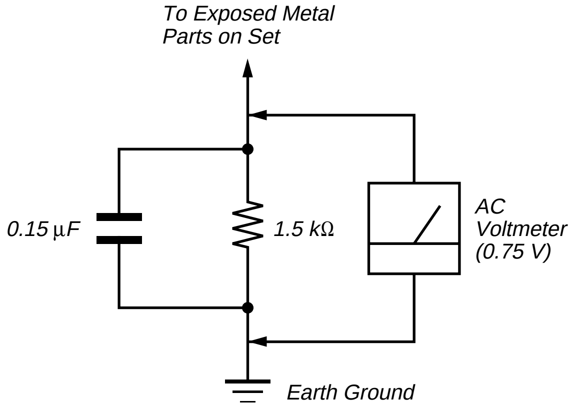

Fig. A Using AC voltmeter to check AC leakage

WARNING!!

WHEN SERVICING, DO NOT APPROACH THE LASER EXIT WITH THE EYE TOO CLOSELY. IN CASE IT IS NECESSARY TO CONFIRM LASER BEAM EMISSION, BE SURE TO OBSERVE FROM A DISTANCE OF MORE THAN 25 cm FROM THE SURFACE OF THE OBJECTIVE LENS ON THE OPTICAL PICK-UP BLOCK.

CAUTION:

The use of optical instrument with this product will increase eye hazard.

CAUTION

Use of controls or adjustments or performance of procedures other than those specified herein may result in hazardous radiation exposure.

SAFETY-RELATED COMPONENT WARNING!!

COMPONENTS IDENTIFIED BY MARK ⚠ OR DOTTED LINE WITH MARK ⚠ ON THE SCHEMATIC DIAGRAMS AND IN THE PARTS LIST ARE CRITICAL TO SAFE OPERATION. REPLACE THESE COMPONENTS WITH SONY PARTS WHOSE PART NUMBERS APPEAR AS SHOWN IN THIS MANUAL OR IN SUPPLEMENTS PUBLISHED BY SONY.

TABLE OF CONTENTS

Section *Title* *Page*

Service Note 4

1. GENERAL

This Player Can Play the Following Discs 1-1
Getting Started 1-1
Basic Operations 1-2
Playing Discs in Various Modes 1-4
Setting and Adjustments 1-8
Additional Information 1-9

2. DISASSEMBLY

2-1. Case Removal 2-1
2-2. Front Panel Section Removal 2-1
2-3. MB-78 Board Removal 2-1
2-4. AU-197 Board Removal 2-1
2-5. MD Block Ass'y Removal 2-2
2-6. TK-47 Board Removal 2-2
2-7. Tray Removal 2-2
2-8. Skew Motor (M902) Removal 2-2
2-9. Sled Motor (M501) Removal 2-3
2-10. Spindle Motor (M901) Removal 2-3
2-11. Optical Pick-up Removal 2-3
2-12. Internal Views 2-4
2-13. Circuit Boards Location 2-5

3. BLOCK DIAGRAMS

3-1. Block Diagram 1 (RF/Servo, Power) 3-1
3-2. Block Diagram 2 (Signal Process) 3-6

4. PRINTED WIRING BOARDS AND SCHEMATIC DIAGRAMS

4-1. Frame Schematic Diagram 4-1
4-2. Printed Wiring Boards and Schematic Diagrams 4-5
TK-47 Printed Wiring Board 4-5
TK-47 Schematic Diagram 4-7
MB-78, FG-43 Printed Wiring Boards 4-12
MB-78 (AV Decoder) Schematic Diagram 4-17
MB-78 (Video Encoder) Schematic Diagram 4-21
MB-78 (Drive Control), FG-43 (Sled) Schematic Diagrams 4-25
MB-78 (DSP) Schematic Diagram 4-30
MB-78 (Bias) Schematic Diagram 4-33
MB-78 (IF µ-COM) Schematic Diagram 4-37
MB-78 (ARP, L GATE Array, Decrypt) Schematic Diagram 4-41
MB-78 (System µ-COM, S GATE Array) Schematic Diagram 4-45
ME-15, HP-96 Schematic Diagrams and Printed Wiring Boards 4-49
AU-197 Printed Wiring Board 4-53
AU-197 Schematic Diagram 4-57
FL-88, FR-133 Printed Wiring Boards 4-61
FL-88, FR-133 Schematic Diagrams 4-65
ER-2 Schematic Diagram 4-69
ER-2 Printed Wiring Board 4-73
Power Block (HS-930SF) Printed Wiring Board and Schematic Diagram 4-78
Power Block (HS-930SH) Printed Wiring Board and Schematic Diagram 4-81
Power Block (HS-930SU) Printed Wiring Board and Schematic Diagram 4-84

5. IC PIN FUNCTION DESCRIPTION

5-1. Interface Control Pin Function (MB-78 Board IC604) .. 5-1
5-2 System Control Pin Function (MB-78 Board IC805) 5-2

6. TEST MODE

6-1. Starting up Test Mode 6-1
6-2. Slection of Check Item 6-1
6-3. Error Display 6-2
6-4. General Description of Checking Method 6-2
6-5. Drive Auto Adjustment 6-12
6-6. Drive Manual Operation 6-13
6-6-1. Drive Manual Operation menu screen 6-13
6-6-2. Disc Type 6-13
6-6-3. Manual Control 1 6-13
6-6-4. Manual Control 2 6-14
6-6-5. Manual Control 3 6-14
6-6-6. Manual Adjust 1 6-14
6-6-7. Manual Adjust 2 6-15
6-6-8. Auto Adjust 6-15
6-6-9. Check 6-15
6-6-10. EEPROM Data screen Display 6-16
6-7. Other Operation 6-16

7. ELECTRICAL ADJUSTMENT

7-1. Power Supply Check 7-1
1. HS-930SF/930SH/930SU Board 7-1
7-2. Adjustment of System Control 7-2
1. 27 MHz Free Run 7-2
7-3. Adjustment of Video System 7-2
1. Video Level Adjustment 7-2
2. S-Terminal Output Check 7-2
3. Checking Composite Video Output B-Y 7-2
4. Checking Composite Video Output R-Y 7-3
5. Checking Composite Video Output Y 7-3
6. Checking S Video Output S-C 7-3
7. Checking S Video Output DC Level 7-3
7-4. Adjustment Related Parts Arrangement 7-4

8. REPAIR PARTS LIST

8-1. Exploded Views 8-1
8-1-1. Case Assembly 8-1
8-1-2. Front Panel Assembly 8-2
8-1-3. Chassis Assembly 8-3
8-1-4. DVD Mechanism Chassis Assembly (1) 8-4
8-1-5. DVD Mechanism Chassis Assembly (2) 8-5
8-2. Electrical Parts List 8-6

SERVICE NOTE

1. DISASSEMBLY

• This set can be disassembled in the order shown below.

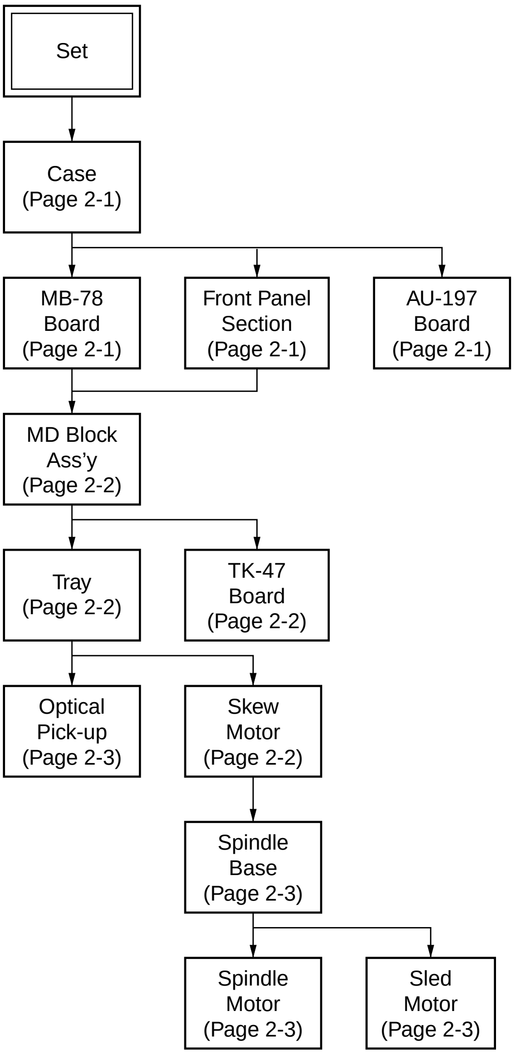

2. NOTE ON REMOVE THE CASE

1) Remove six tapping screws. (See Fig. 1)
2) Open the side of case. (See Fig. 1)
3) Remove the case as lift straight. (See Fig. 1)

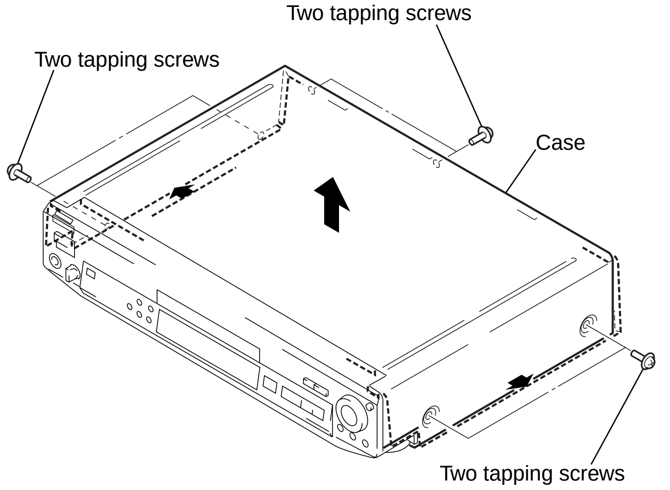

Fig. 1

3. DISK REMOVAL PROCEDURE (at POWER OFF)

1) Insert a cross-tip screwdriver into a hole at the bottom, and rotate the cam gear ① in direction Ⓐ. (See Fig. 2)
   Note: To prevent a damege of cam gear, rotate it in direction Ⓐ by 1/4 turn.
2) Draw out the tray ② in direction Ⓑ by hand, and remove a disk. (See Fig. 2)

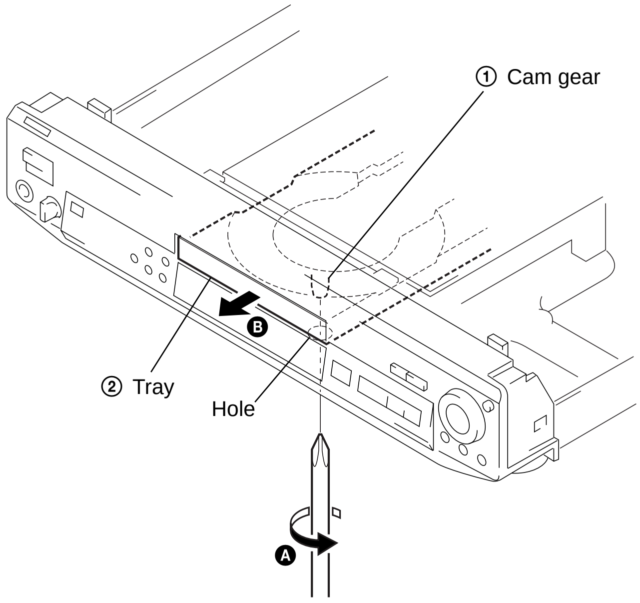

Fig. 2

4. HOW TO SERVICE MB-78 BOARD

1) Remove the case from the set. (Refer to 2-1)
2) Remove the cover (upper). (Refer to 2-3)
3) Set the MB-78 board as shown in Fig. 3.
   Note: Do not disconnect wiring.

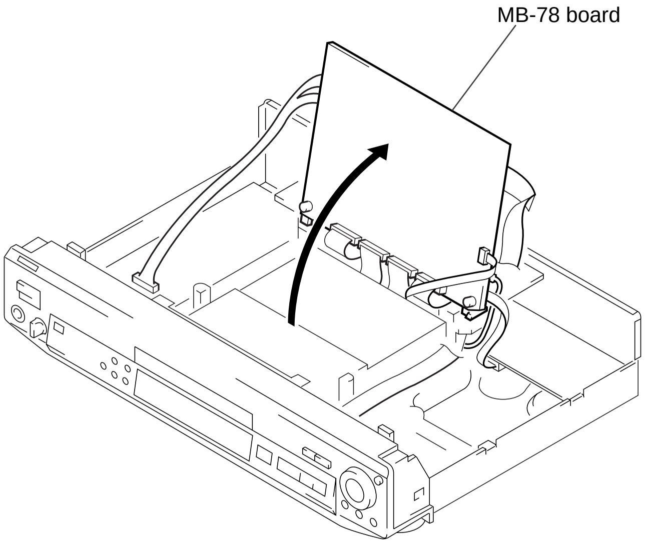

Fig. 3

5. NOTE ON MOUNTEING SLED MOTOR

1) Push the sled motor ass'y ① toward direction Ⓐ. (See Fig. 4)
2) Tighten two screws ② (M1.7 × 2.5).

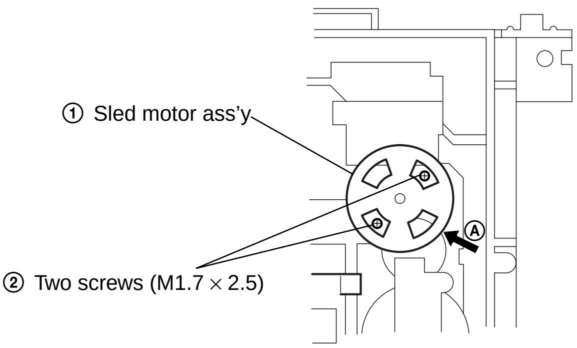

Fig. 4

3) Raising the MD block ass'y ③ 90 º with the side down. confirm that the optical pick-up ④ falls by self weight. (See Fig. 5)
4) Further, with the front side of MD block ass'y ③ up, confirm that the optical pick-up falls by self weight.

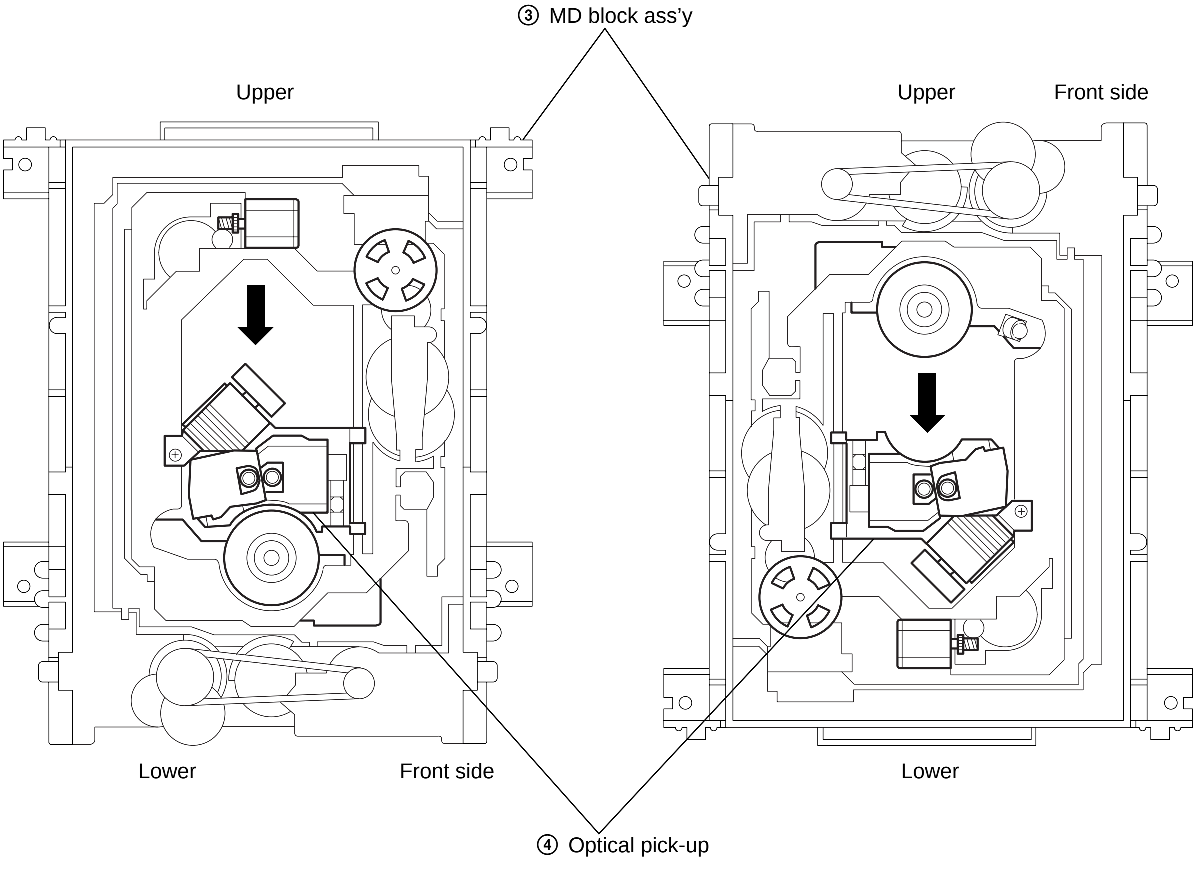

Fig. 5

6. REPLACING OPTICAL PICK-UP

6-1. Handling

1) A red laser diode for DVD requires more attention to static electricity than general infrared laser diodes for CD.
   Because its durability to static electricity is far weaker than that of infrared laser diodes, always use an earth band when handling the optical pick-up block as service parts.

2) As for the flexible board KHS-180A (RP) packed as service parts, the short lands have been soldered to protect from static electricity. Accordingly, remove solders when replacing optical pick-up. (See Fig. 6)

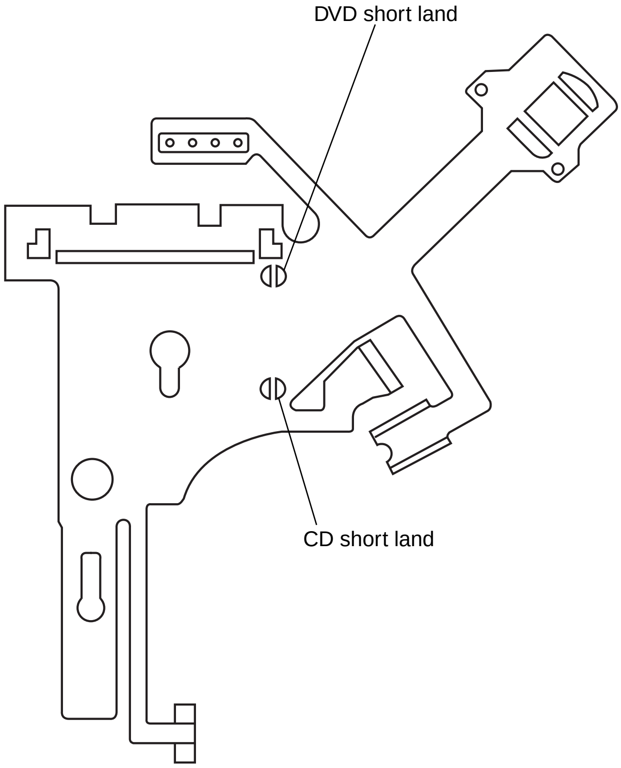

Fig. 6 Flexible board

3) In handling the KHS-180A (RP), do not touch inhibited parts shown in Fig. 7, but grip the slide base bearing and U-shaped guide.

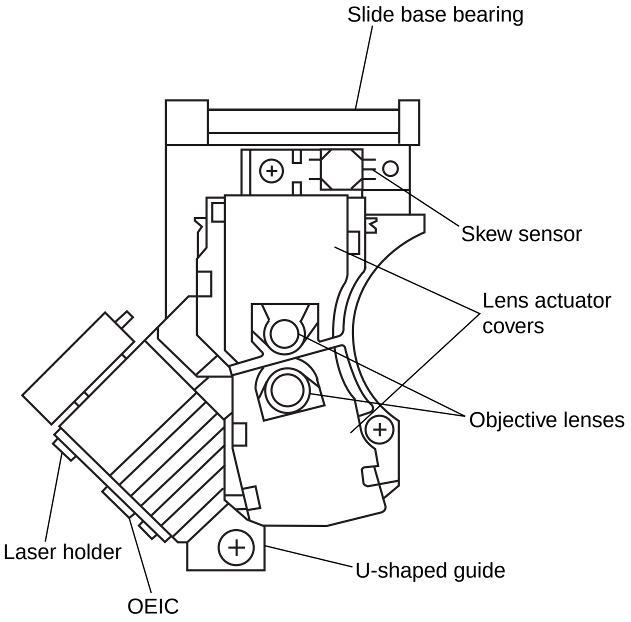

Touch inhibited parts
- Objective lens
- Skew sensor
- Laser holder
- Laser coupler
- Flexible board
- OEIC
- Lens actuator covers

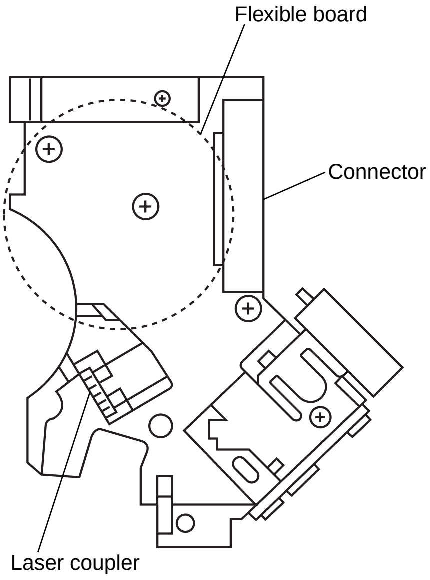

Fig. 7 KHS-180A (RP)

7. NOTE ON ASSEMBLING MECHANICAL DECK

7-1. Application of Grease

1) Grease must be applied if the following parts were replaced. (See Fig. 8)

   Note 1: Recommended grease is Foil KG-70MP.

   Note 2: In applying grease, take care not to allow grease to stick to other parts (particularly, rubber belt, spindle motor, and optical pick-up)

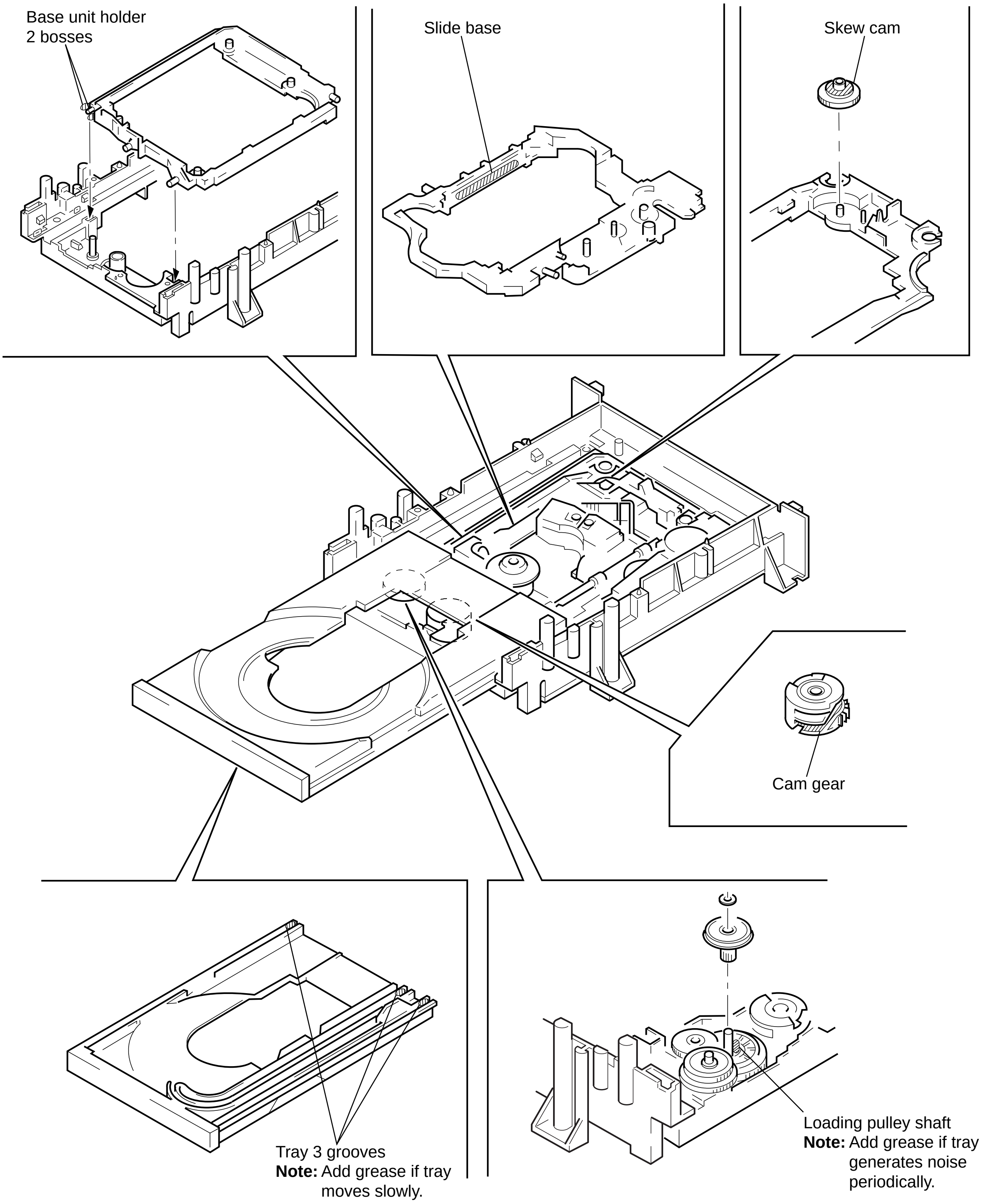

Fig. 8

7-2. Cleaning Spindle Motor Turntable

1) Remove the tray. (Refer to 2-7)
2) Clean the spindle motor turntable if disc antiskid rubber (black) is dirty. (See Fig. 9)

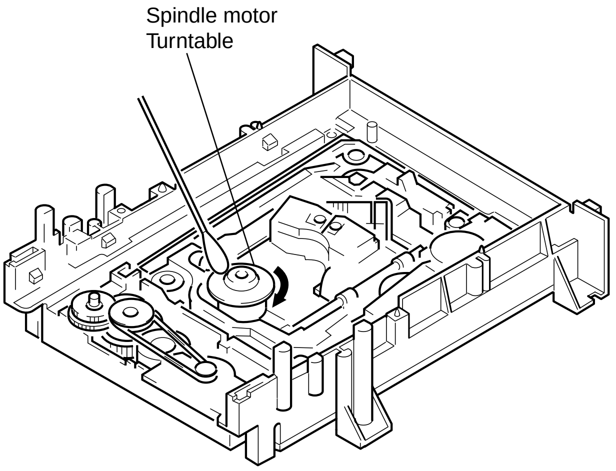

Fig. 9

7-3. Aligning Phase of Cam Gear and Drive Gear

1) Align triangle marks when assembling the cam gear and drive gear. (See Fig. 10)

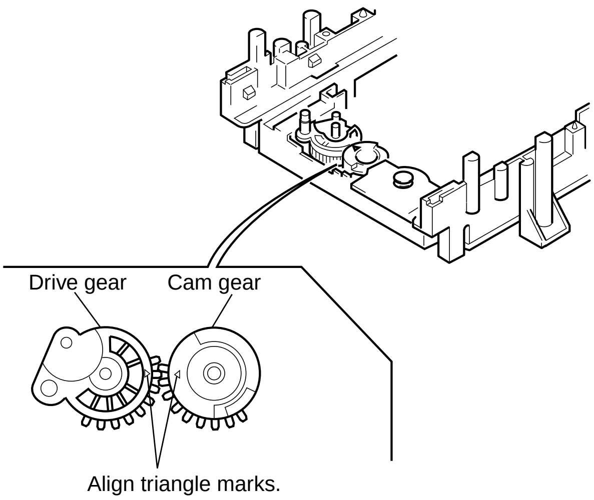

Fig. 10

7-4. Deformation of Insulator

1) Assemble the spindle base into the base unit.
2) Lock with 4 shoulder screws. (See Fig. 11)
3) Check if 4 insulators deformed. (See Fig. 11)

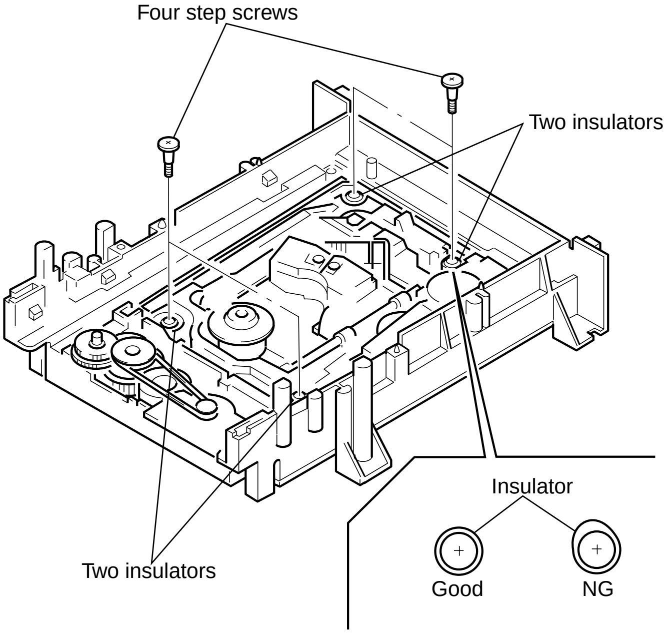

Fig. 11

7-5. Note on Mounting FG-43 Board

1) Align two bosses. (See Fig. 12)
2) Fix the board securely with screws (PTPWH2 × 5). (The sensor will not function normally if the board floats up.)

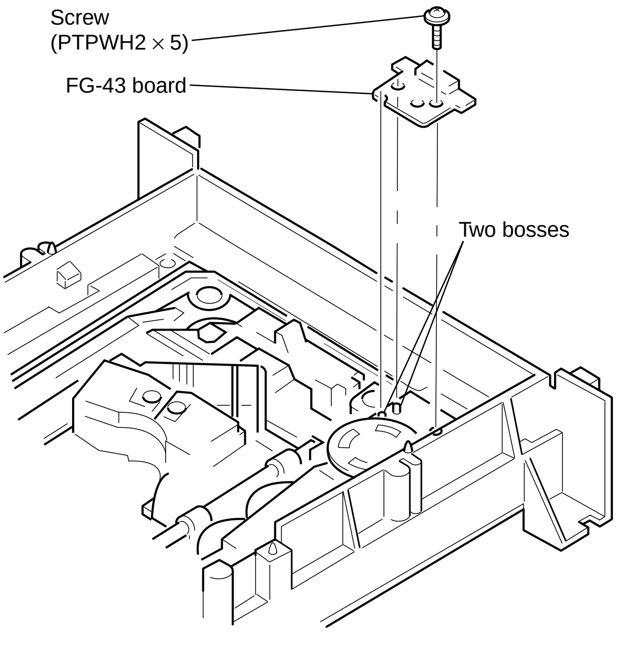

Fig. 12

7-6. Note on Mounting TK-47 Board

1) Align two bosses. (See Fig. 13)
2) Align four tabs. (See Fig. 13)
3) Fix the board securely with 3 screws (BV3 × 10). (The sensor will not function normally if the board floats up.)

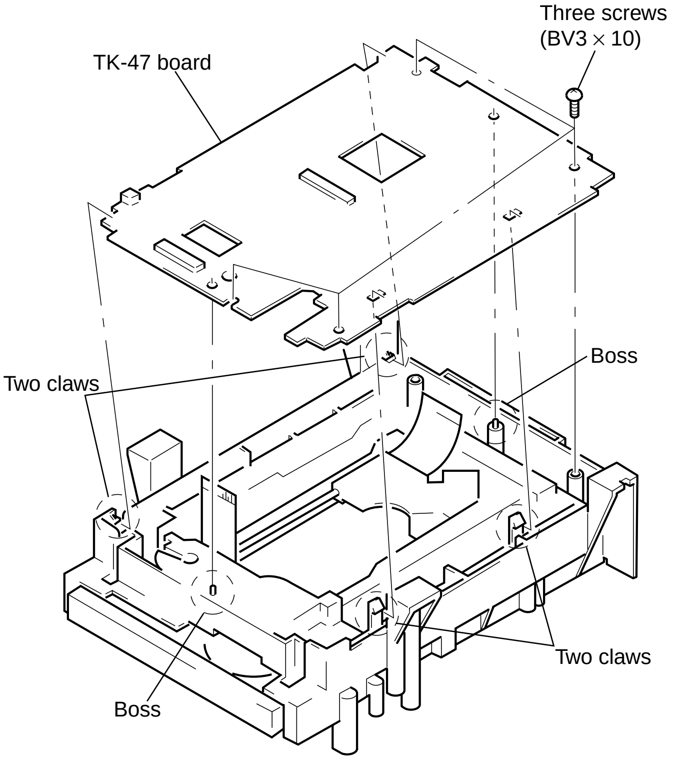

Fig. 13

7-7. Note on connecting OPT Harness

1) The optical pick-up could be destroyed unless the OPT harness is connected normally to the connector. (See Fig. 14)

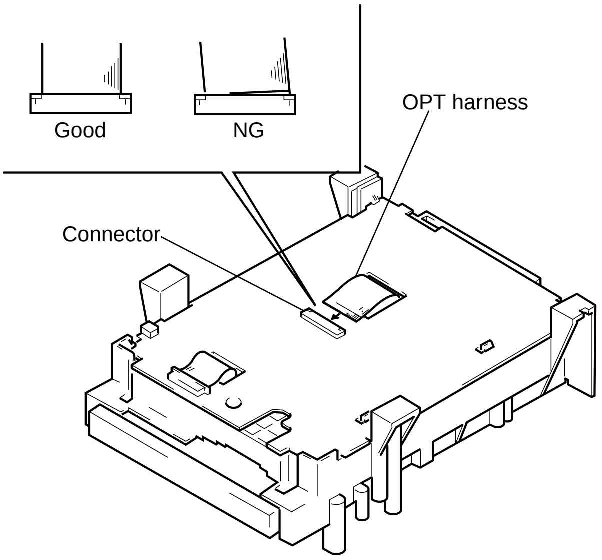

Fig. 14

SECTION 1
GENERAL

This section is extracted from DVP-S315 instruction manual.

About This Manual

The instructions in this manual are for models DVP-S715 and DVP-S315. The DVP-S715 is the model used for illustration purposes. Any difference in operation is clearly indicated in the text, for example, "DVP-S715 only."

Conventions

- Instructions in this manual describe the controls on the player.
  You can also use the controls on the remote if they have the same or similar names as those on the player.
- The icons on the right are used in this manual:

Icon	Meaning
(remote icon)	Indicates that you can use only the remote to do the task.
(tip icon)	Indicates tips and hints for making the task easier.
DVD	Indicates the functions for DVD VIDEOs.
VIDEO CD	Indicates the functions for VIDEO CDs.
CD	Indicates the functions for Audio CDs.

This Player Can Play the Following Discs

	DVD VIDEOs		VIDEO CDs		Audio CDs	
Disc logo	DVD VIDEO		COMPACT disc DIGITAL VIDEO		COMPACT disc DIGITAL AUDIO	
Contents	Audio + Video		Audio + Video		Audio	
Disc size	12 cm	8 cm	12 cm	8 cm	12 cm	8 cm (CD single)
Play time	About 4 h (for single-sided DVD)/ about 8 h (for double-sided DVD)	About 80 min. (for single-sided DVD)/ about 160 min. (for double-sided DVD)	74 min.	20 min.	74 min.	20 min.

"DVD VIDEO" logo is a trademark.

Region code of DVDs you can play on this unit

Your DVD player has a region code printed on the back of the unit and will only play DVDs that are labeled with identical region codes.

DVDs labeled (ALL) will also play on this unit.
If you try to play any other DVD, the message "Playing this disc prohibited by area limits." will appear on the TV screen.
Depending on the DVD, no region code indication may be labeled even though playing the DVD is prohibited by the area limits.

Note on playback operations of DVDs and VIDEO CDs
Some playback operations of DVDs and VIDEO CDs may be intentionally fixed by software producers. Since this player plays DVDs and VIDEO CDs according to the disc contents the software producers designed, some playback features may not be available. Also refer to the instructions supplied with the DVDs or VIDEO CDs.

Terms for discs

- **Title**
  The longest sections of a picture or a music piece on a DVD; a movie, etc, for a picture piece on a video software; or an album, etc, for a music piece on an audio software. Each title is assigned a title number enabling you to locate the title you want.
- **Chapter**
  Sections of a picture or a music piece that are smaller than titles. A title is composed of several chapters. Each chapter is assigned a chapter number enabling you to locate the chapter you want. Depending on the disc, no chapters may be recorded.
- **Track**
  Sections of a picture or a music piece on a VIDEO CD or a CD. Each track is assigned a track number enabling you to locate the track you want.

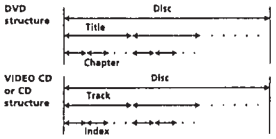

- **Index (CD) / Video Index (VIDEO CD)**
  A number that divides a track some sections to easily locate the point you want on a VIDEO CD or a CD. Depending on the disc, no indexes may be recorded.
- **Scene**
  On a VIDEO CD with PBC functions, the menu screens, moving pictures and still pictures are divided into sections called "scenes." Each scene is assigned a scene number enabling you to locate the scene you want.

Note on PBC (Playback Control) (VIDEO CDs)

This player conforms to Ver. 1.1 and Ver. 2.0 of VIDEO CD standards. You can enjoy two kinds of playback according to the disc type.

Disc type	You can
VIDEO CDs without PBC functions (Ver. 1.1 discs)	Enjoy video playback (moving pictures) as well as music.
VIDEO CDs with PBC functions (Ver. 2.0 discs)	Play interactive software using menu screens displayed on the TV screen (PBC Playback), in addition to the video playback functions of Ver 1.1 discs. Moreover, you can play high-resolution still pictures, if they are included on the disc.

Discs that the player cannot play

The player cannot play discs other than the ones listed in the table on page 4. CD-ROMs including PHOTO CDs, data sections in CD-EXTRAs and DVD-ROMs etc. can not be played.

This product incorporates copyright protection technology that is protected by method claims of certain U.S. patents and other intellectual property rights owned by Macrovision Corporation and other rights owners. Use of this copyright protection technology must be authorized by Macrovision Corporation, and is intended for home and other limited viewing uses only unless otherwise authorized by Macrovision Corporation. Reverse engineering or disassembly is prohibited.

Unpacking

Check that you have the following items:
- Audio/video connecting cord (1)
- S video cable (1)
- Remote commander (remote) RMT-D102P (for DVP-S715) (1)
- Remote commander (remote) RMT-D105P (for DVP-S315)(1)
- Size AA (R6) batteries (2)

Inserting batteries into the remote

You can control the player using the supplied remote. Insert two R6 (size AA) batteries by matching the + and – on the batteries. When using the remote, point it at the remote sensor ■ on the player.

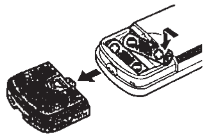

You can control TVs and Sony AV amplifiers (receivers) using the supplied remote
See page 31.

Notes
- Do not leave the remote in an extremely hot or humid place.
- Do not drop any foreign object into the remote casing, particularly when replacing the batteries.
- Do not expose the remote sensor to direct sunlight or lighting apparatuses. Doing so may cause a malfunction.
- If you will not use the remote for an extended period of time, remove the batteries to avoid possible damage from battery leakage and corrosion.

Hooking Up the System

Overview

This section describes how to hook up the CD/DVD player to a TV. You cannot connect this player to a TV without an EURO AV (SCART) connector or a video input connector. **Be sure to turn off the power of each component before making the connections.**

■ To connect to a TV and a VCR

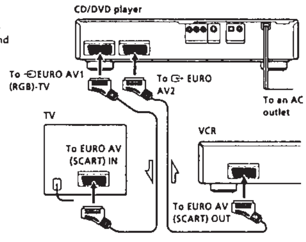

■ To connect to a TV and to listen to the sound through speakers connected to an amplifier (2ch – L,R)

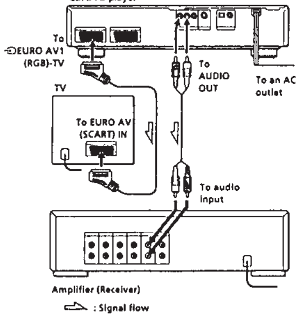

What cords will I need?

EURO-AV (SCART) connecting cord (not supplied)

Hookups

Be sure to make connections firmly to avoid hum and noise.

■ To connect to a TV and a VCR

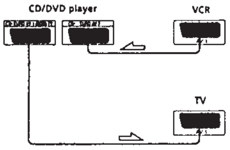

Notes
- Do not connect this player to a video deck. If you view the pictures on your TV after making the connections shown on the right, a picture noise may appear.

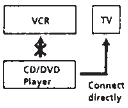

- Depending on the TV or amplifier, sound distortion may occur because the audio output level is high. In this case, set "AUDIO ATT" in "INITIAL SETUP 2" to "ON" in the setup display. For details, see page 36.
- You cannot enjoy the picture with S video signal if your TV is not conformed to the S video signal. Refer to the instructions supplied with your TV.
- When you set "EURO AV OUT" to "S VIDEO" or "RGB" under "INITIAL SETUP 1" in the setup display, use the EURO AV (SCART) connecting cord conformed to each signal.

If your TV has no EURO AV (SCART) connectors
You can connect the player to a TV (with audio/video input jacks) and/or an amplifier using the supplied audio/video connectiong cord. When connecting the cords, be sure to match the color-coded cord to the appropriate jacks on the components: Yellow (video) to Yellow, Red (right) to Red and White (left) to White.

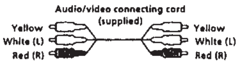

■ To listen to the sound through TV speakers

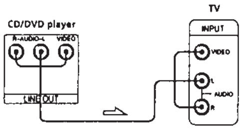

■ To listen to the sound through speakers connected to an amplifier

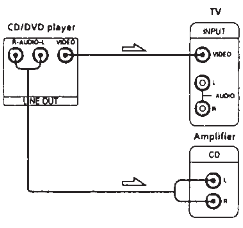

■ **If your TV has an S video input connector**
Connect the component via the S VIDEO OUT connector using the S video cable (supplied) instead of the video connecting cord. You will get a better picture.

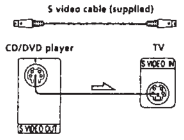

(Continued)

💡 **If you have a digital component such as an amplifier with a digital connector, DAT or MD**
Connect the component via the DIGITAL OUT OPTICAL or COAXIAL connector using an optical or coaxial digital connecting cord (not supplied).
When you play a DVD, set "DIGITAL OUT" in "INITIAL SETUP 2" to "PCM" in the setup display. (page 36)

■When using an optical digital connecting cord

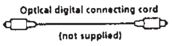

Take off the cap and plug in the optical digital connecting cord.

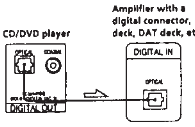

■When using a coaxial digital connecting cord

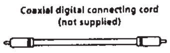

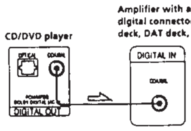

Notes
- Refer to the instructions supplied with the component to be connected.
- You cannot make digital audio recordings of discs recorded in Dolby* Digital (AC-3) format directly using an MD deck or DAT deck.

When you make the connections above, set "DIGITAL OUT" in "INITIAL SETUP 2" to "PCM." Otherwise, a loud noise will suddenly come out from the speakers, affecting your ears or causing the speakers to be damaged.

* Manufactured under license from Dolby Laboratories Licensing Corporation. "Dolby", the double-D symbol ⅅ, "Pro Logic" and "Dolby Digital (AC-3)" are trademarks of Dolby Laboratories Licensing Corporation.

💡 **If you have a digital component with a built-in MPEG Audio decoder or Dolby Digital decoder**
Connect the component via the DIGITAL OUT OPTICAL or COAXIAL connector using an optical or coaxial digital connectiong cord (not supplied). When the component with a built-in MPEG Audio decoder or Dolby Digital decoder is connected, the player plays DVDs with sound recorded in MPEG Audio and Dolby Digital (AC-3) format while producing the effect of being in a movie theater or a concert hall.
In the menu, set "DIGITAL OUT" in "INITIAL SETUP 2" to "MPEG", "DOLBY DIGITAL" or "MPEG/DOLBY DIGITAL." (page 36)

■When using an optical digital connectiong cord

Take off the cap and plug in the optical digital connectiong cord.

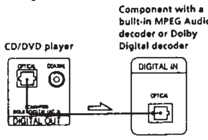

■When using a coaxial digital connectiong cord

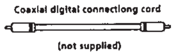

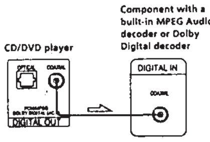

Note
Refer to the instructions supplied with the component to be connected.

Necessary Setup Before Using the Player

Some setups are necessary for the player depending on the TV or other components to be connected.
For details on using the setup display, see page 33.
For details on each setup display item, see pages 34 to 36.

■To connect the player to a wide-screen TV
In the setup display, set "TV TYPE" in "INITIAL SETUP 1" to "16:9." This is default setting.

■To connect the player to a normal TV
In the setup display, set "TV TYPE" in "INITIAL SETUP 1" to "4:3 LETTER BOX" or "4:3 PAN SCAN." For details, see page 35.

■To connect the player to a TV or VCR via EURO AV connector that conforms to the S video signals or RGB signals
In the setup display, set "EURO AV OUT" in "INITIAL SETUP 1" to "S VIDEO" or "RGB." For details, see page 35.

■To listen to the stereo sound through speakers connected to a normal amplifier or through TV speakers
In the setup display, set "SURROUND" in "INITIAL SETUP 2" to "OFF."

■To listen to the sound through speakers connected to an amplifier (or a TV) that conforms to Dolby Pro Logic surround
In the setup display, set "SURROUND" in "INITIAL SETUP 2" to "ON." This is default setting.

■To listen to the sound through speakers connected to an amplifier with a digital connector or to output the sound to a digital component such as a DAT or MD deck
When you play a DVD, set "DIGITAL OUT" in "INITIAL SETUP 2" to "PCM" in the setup display. This is default setting.

Use the setup display to change the various settings for the picture and sound.
For details, see page 33.

This player conforms to the PAL color system. When you play a disc recorded in the NTSC color system, the player outputs the video signal or the setup display etc. in the NTSC color system and the picture may not appear on the TV screen. In this case, open the disc tray and remove the disc.

Selecting the Language for On-screen Display

You can select the language for the setup display or the messages displayed on the screen. Default setting is "ENGLISH."

DVP-S315

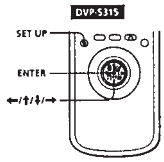

1 Press SET UP and select "[icon]" using ←/→, and then press ENTER.

2 Select "OSD" (On-Screen Display) using ↑/↓, then press → or ENTER.

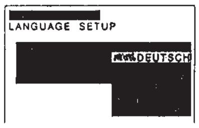

3 Select the language you want using ↑/↓, then press ENTER.

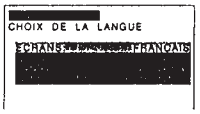

To cancel using the setup display on the way
Press SET UP.

Note
The languages you can select are the ones displayed in step 2. For details, see page 34.

Playing a DVD

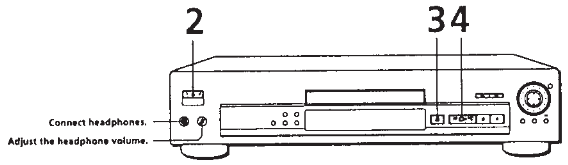

- **The operating procedure of CDs or VIDEO CDs is different from that of DVDs.**
  For details, see pages 14 to 17.

💡 **You can turn on the player using the remote**
Press I/⏻ when the indicator above the ON/STANDBY button on the front panel is lit in red.

1 **Make settings on your TV.**
Turn on the TV and select the video input so that you can view the pictures from this player.

When using an amplifier
Turn on the amplifier and select the appropriate position so that you can listen to the sound from this player.

2 Press ON/STANDBY to turn on the player.
The indicator (red) above the ON/STANDBY button changes to green and the front panel display lights up.

3 Press ≙, and place the disc on the disc tray.

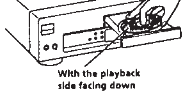

4 Press ▷.
The disc tray closes, and the player starts playback (Continuous Play). Adjust the volume on the TV or the amplifier.

After following Step 4
A DVD menu or title menu may appear on the TV screen (see page 13).

Notes
- If you leave the player or the remote in pause mode for 15 minutes, the screen saver image appears automatically. To disappear the screen saver, press ▷. (If you want to set the screen saver function to off, see page 35.)
- If you don't operate the player or the remote for more than 30 minutes when a disc is not being played, the power is automatically turned off (Auto Power Off function.)

Depending on the DVD, some operations may be different or restricted. Refer to the instructions supplied with your disc.

💡 **When "RESUME" appears on the front panel display**
You can resume playback from the point where you stopped the DVD. For details on playing from the beginning of the disc, see page 25.

Note
You may not be able to do Resume Play depending on the DVD.

Note
Depending on the DVD, you may not be able to do some of the operations described on the right.

💡 **You can also use the controls on the player**
If the controls on the player have the same names as those on the remote, you can use them.

💡 **What are chapter and title?**
See page 5.

💡 **Each time you press SEARCH MODE**
"CHAPTER SEARCH," "TITLE SEARCH" and "TIME SEARCH" appear on the TV screen.

💡 **If you want to change the search speed (DVP-S315 only)**
Two speeds are available: 1▶▶ or 1◀◀ (about 10 times the normal speed) and 2▶▶ or 2◀◀ (about 30 times).
Each time you press ⊖ or ⊖, the indication changes as follows:
1▶▶ (1◀◀) ↔ 2▶▶ (2◀◀)

DVP-S315

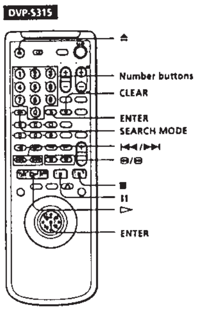

To	Press
Stop	■
Pause	II
Resume play after pause	II or ▷
Go to the next chapter in Continuous Play mode	▶▶|
Go back to the preceding chapter in Continuous Play mode	|◀◀
Select the chapter	1 SEARCH MODE repeatedly until "CHAPTER SEARCH" appears on the TV screen. 2 Number buttons to select the chapter number, then ENTER or ▷.
Select the title	1 SEARCH MODE repeatedly until "TITLE SEARCH" appears on the TV screen. 2 Number buttons to select the title number, then ENTER or ▷.
Locate a point using the time code	1 SEARCH MODE repeatedly until "TIME SEARCH" appears on the TV screen. 2 Number buttons to enter a time code, then ENTER or ▷.
Locate a point while monitoring the picture (Scan) (DVP-S315 only)	⊖/⊖. You will not hear the sound during this operation. When you find the point you want, press ▷ to return to the normal speed.
Stop play and remove the disc	≙

If you have made a mistake when you press the number button.
Press CLEAR, then the correct number button.

To play at various speeds/frame-by-frame

Using the click shuttle and the JOG button/indicator on the player, you can playback a DVD with various speed or frame-by-frame. Each time you press JOG, it changes between shuttle mode and jog mode. You can also use the **click shuttle** and the JOG button/indicator on the remote (DVP-S715 **only**).

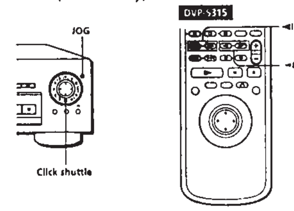

■ To change the playback speed (Shuttle mode)
Turn the click shuttle. The playback speed changes **depending on the turning** direction and angle as follows:

2►► Fast forward (about 30 times the normal speed)
↕
1►► Fast forward (about 10 times the normal speed)
↕
×2► (About twice the normal speed)
↕
► (Normal speed)
↕
1I► Slow (playback direction)
↕
2I► Slow (playback direction – slower than "1I►")
↕
II Pause
↕
2◄I Slow (opposite direction – slower than "1◄I")
↕
1◄I Slow (opposite direction)
↕
×2◄ (About twice the normal speed : opposite direction)
↕
1◄◄ Fast Rewind (about 10 times the normal speed)
↕
2◄◄ Fast Rewind (about 30 times the normal speed)

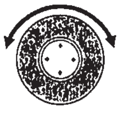

If you turn the click shuttle quickly, the playback speed goes to 2►►/2◄◄ at once.

■ To play the DVDs frame-by-frame changing the playback speed (Jog mode)

1 Press JOG.
JOG lights up during jog mode. When you press JOG on the player, it becomes pause.

2 Turn the click shuttle.

Depending on the turning speed, the playback goes to frame-by-frame toward the turning direction of the click shuttle. If you turn the click shuttle with constant speed for a while, the playback speed goes to slow or normal.

■ To return to the normal speed
Press ▷.

You can also enjoy Slow-motion play using the buttons on the remote (DVP-S315 only).
Press ◄I or I►. 1◄I /1I► and 2◄I /2I► are available. Each time you press ◄I or I►, the indication changes as follows:
1◄I (1I►) ↔ 2◄I (2I►)

Notes
- Depending on the DVD, you may not be able to do some of the operations described on the right.
- When you play back a DVD at twice the normal speed in either direction, the sounds of the picture will come out from the LINE OUT (AUDIO) connectors. The sounds are lower than the ones at normal speed. In this case, no sounds come out from the DIGITAL OUT OPTICAL and COAXIAL connectors.

You can also play frame-by-frame using the buttons on the remote (DVP-S315 only).
Press ◄II or II►.

Notes
- The JOG indicator shows the mode of the click shuttle close to the indicator only. When the indicator on the remote does not light up, it keeps shuttle mode on the remote even if the indicator on the player lights up.
- If you don't operate the click shuttle for about 20 seconds after pressing JOG, it returns to shuttle mode on the remote. On the player, it keeps jog mode.

Using the Title Menu

A DVD is divided into long sections of a picture or a music piece called "titles." When you play the DVD which contains several titles, you can select the title you want using the title menu.

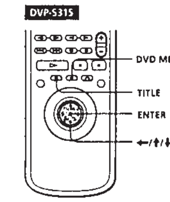

1 Press TITLE.
The title menu appears on the TV screen. The contents of the menu varies from disc to disc.

2 Press ←/↑/↓/→ to select the title you want to play.
Depending on the disc, you can use the number buttons to select the title.

3 Press ENTER.
The player starts playing the selected title.

Using the DVD menu

Some DVDs allow you to select the disc contents using the menu. When you play these DVDs, you can select the language for the subtitles, the language for the sound, etc., using the DVD menu.

1 Press DVD MENU.
The DVD menu appears on the TV screen. The contents of the menu vary from disc to disc.

2 Press ←/↑/↓/→ to select the item you want to change.
Depending on the disc, you can use the number buttons to select the item.

3 To change other items, repeat Step 2.

4 Press ENTER.

Notes
- Depending on the DVD, you may not be able to select the title.
- Depending on the DVD, a "title menu" may simply be called a "menu" or "title" in the instructions supplied with the disc. "Press ENTER." may also be expressed as "Press SELECT."

You can also use the controls on the player
If the controls on the player have the same names as those on the remote, you can use them.

If you want to select the language for the DVD menu
Change the setting using "LANGUAGE SETUP" in the setup display (see page 34).

Note
Depending on the DVD, a "DVD menu" may simply be called a "menu" in the instructions supplied with the disc.

Playing a CD/VIDEO CD

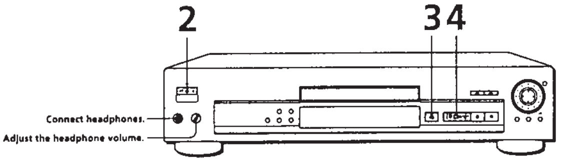

1 **Make settings on your TV.**
Turn on the TV and select the video input so that you can view the pictures from this player.

When using an amplifier
Turn on the amplifier and select the appropriate position so that you can listen to the sound from this player.

2 Press ON/STANDBY to turn on the player.
The indicator (red) above the ON/STANDBY button changes to green and the front panel display lights up.

3 Press ≜, and place the disc on the disc tray.

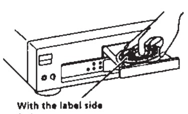

4 Press ▷.
The disc tray closes and the player starts playback (Continuous Play). Adjust the volume on the TV or the amplifier.

Depending on the VIDEO CD, some operations may be different or restricted. Refer to the instructions supplied with your disc.

- **The operating procedure of DVDs is different from that of CDs or VIDEO CDs. For details, see pages 10 to 13.**

You can turn on the player using the remote
Press I/⏻ when the indicator above the ON/STANDBY button on the front panel is lit in red.

After following Step 4
The menu screen may appear on the TV screen depending on the VIDEO CD. You can play the disc interactively, following the instructions on the menu screen. (PBC Playback, see page 17.)

Notes
- If you leave the player or the remote in pause mode for 15 minutes, the screen saver image appears automatically. To disappear the screen saver, press ▷. (If you want to set the screen saver function to off, see page 35.)
- If you don't operate the player or the remote for more than 30 minutes when a disc is not being played, the power is automatically turned off (Auto Power Off function.)

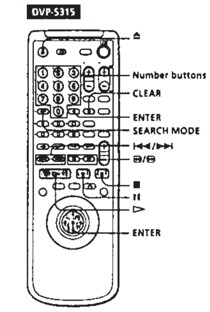

To	Press
Stop	■
Pause	II
Resume play after pause	II or ▷
Go to the next track in Continuous Play mode	►►I
Go back to the preceding track in Continuous Play mode	I◄◄
Select the track	1 SEARCH MODE repeatedly until "TRACK SEARCH" appears on the TV screen. 2 Number buttons to select the track number, then ENTER or ▷.
Select the scene before you start playing a VIDEO CD with PBC functions and during PBC playback (Scene Search)	1 SEARCH MODE repeatedly until "SCENE SEARCH" appears on the TV screen. 2 Number buttons to select the scene number, then ENTER or ▷. (To check the current scene number, press DISPLAY. The scene number appears at the left top of the TV screen.)
Locate a point while monitoring the picture (Scan) (DVP-S315 only)	⊖/⊕. You will not hear the sound during this operation. When you find the point you want, press ▷ to return to the normal speed.
Stop play and remove the disc	≜

If you have made a mistake when you press the number button.
Press CLEAR, then the correct number button.

When "RESUME" appears on the front panel display
You can resume playback from the point where you stopped the CD/VIDEO CD. For details on playing from the beginning of the disc, see page 25.

What is a track?
See page 5.

What is an index?
See page 5.

What is a scene?
See page 5.

You can also use the controls on the player
If the controls on the player have the same names as those on the remote, you can use them.

If you want to change the search mode
Press SEARCH MODE. Each time you press in case of a VIDEO CD, "SCENE SEARCH," "TRACK SEARCH" and "V. (VIDEO) INDEX SEARCH" appear on the TV screen. In case of a CD, only "TRACK SEARCH" appears.

If you want to change the search speed (DVP-S315 only)
Two speeds are available: 1►► or 1◄◄ (about 10 times the normal speed) and 2►► or 2◄◄ (about 30 times). Each time you press ⊖ or ⊕, the indication changes as follows:
1►► (1◄◄) ↔ 2►► (2◄◄)

Note
Some discs do not allow you to start playing from a particular scene. In this case, if you do Scene Search before you start playing, the player starts playing from scene 1. If you do Scene Search while playing a disc, the player starts playing from the current scene.

To play at various speeds / frame-by-frame

Using the click shuttle and the JOG button/indicator on the player, you can playback a CD/VIDEO CD with various speed or frame-by-frame. Each time you press JOG, it changes between shuttle mode and jog mode.
You can also use the click shuttle and the JOG button/indicator on the remote (DVP-S715 only).

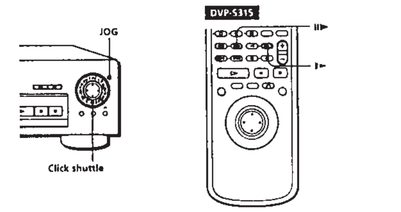

You can also enjoy Slow-motion play using the buttons on the remote (DVP-S315 only).
Press I►, 1I► and 2I► are available.
Each time you press I►, the indication changes as follows:
1I► ↔ 2I►

Notes
- Depending on the VIDEO CD, you may not do some of the operations described on the right.
- When you play a VIDEO CD, there is no sound except for the playback at normal speed.

You can also play frame-by-frame using the buttons on the remote (DVP-S315 only).
Press II►.

Notes
- The JOG indicator shows the mode of the click shuttle close to the indicator only. When the indicator on the remote does not light up, it keeps shuttle mode on the remote even if the indicator on the player lights up.
- If you don't operate the click shuttle for about 20 seconds after pressing JOG, it returns to shuttle mode on the remote. On the player, it keeps jog mode.

■ To change the playback speed (Shuttle mode)
Turn the click shuttle. The playback speed changes depending on the turning direction and angle as follows:

2►► Fast forward (Faster than "1►►")
↕
1►► Fast forward
↕
×2► (About twice the normal speed)
↕
► (Normal speed)
↕
1I► Slow (playback direction) – VIDEO CD Only –
↕
2I► Slow (playback direction – Slower than "1I►") – VIDEO CD Only –
↕
II Pause
↕
1◄◄ Fast Rewind
↕
2◄◄ Fast Rewind (Faster than "1◄◄")

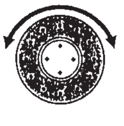

If you turn the click shuttle quickly, the playback speed goes to 2►►/2◄◄ at once.

■ To play the VIDEO CDs frame-by-frame changing the playback speed (Jog mode – VIDEO CD Only)

1. Press JOG.
   JOG lights up during jog mode. When you press JOG on the player, it becomes pause.
2. Turn the click shuttle.

Depending on the turning speed, the playback goes to frame-by-frame toward the playback direction only. If you turn the click shuttle with constant speed for a while, the playback speed goes to slow or normal.

■ To return to the normal speed
Press ▷.

When playing VIDEO CDs with PBC functions
PBC playback starts automatically.

To cancel PBC playback of a VIDEO CD with PBC functions and play the disc in Continuous Play mode
There are two ways.
- Before you start playing, select the track you want using ◄◄I or ►►I, then press ENTER or ▷.
- Before you start playing, select the track number using the number buttons on the remote, then press ENTER or ▷.
  "Play without PBC" appears on the TV screen and the player starts Continuous Play. You cannot play still pictures such as a menu screen.
  To return to PBC playback, press ■ twice then press ▷.

You can also use the controls on the player
If the controls on the player have the same names as those on the remote, you can use them.

Note
Depending on the VIDEO CD, "Press ENTER" in Step 3 may be expressed as "Press SELECT" in the instructions supplied with the disc.

Playing VIDEO CDs with PBC Functions (PBC Playback – VIDEO CD Only)

When playing VIDEO CDs with PBC functions (Ver. 2.0 discs), you can enjoy simple interactive operations, operations with search functions, etc.
PBC Playback allows you to play VIDEO CDs interactively, following the menu screen on the TV screen.
On this player, you can use the number buttons, ENTER, ◄◄I, ►►I, ↑/↓ and ↶(RETURN) during PBC Playback.

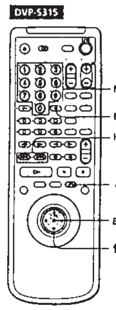

1. Start playing a VIDEO CD with PBC functions, following Steps 1 to 4 in "Playing a VIDEO CD" on page 14.
2. Select the item number you want.
   On the player
   Press ↑/↓ to select the item number.
   On the remote
   Press the number button of the item you want.
3. Press ENTER.
4. Follow the instructions on the menu screen for interactive operations.
   Refer to the instructions supplied with the disc, as the operating procedure may differ according to the VIDEO CD.

Going back to the menu screen

Press ↶, ◄◄I, or ►►I.

Using the On-Screen Display

DVD VIDEO CD CD

You can check the operating status of the player and the information about the disc using the on-screen display on the TV screen.

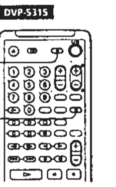

When playing back or stopping a DVD DVD

Press DISPLAY.

Each time you press the button, the on-screen display changes as follows:

On-screen display 1
↓
On-screen display 2
↓
On-screen display 3
↓
On-screen display off

■ Display information of the on-screen display 1 mode

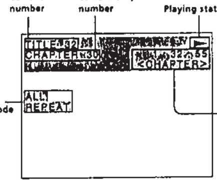

■ Display information of the on-screen display 2 mode

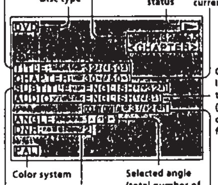

Note
Some information may not be displayed depending on a DVD.

* In display 1 or 2 mode, each time you press TIME the information changes as shown below.

Playing time of the current chapter
↓
Remaining time of the current chapter
↓
Playing time of the current title
↓
Remaining time of the current title

** "PCM", "MPEG" or "DOLBY DIGITAL" is displayed. In "DOLBY DIGITAL" case, the channels in the playing track are displayed by number as follows:

The case of Dolby Digital (AC-3) 5.1 ch:

Rear component 2
DOLBY DIGITAL 3 / 2. 1
Front component 2 + Center component 1
LFE (Low Frequency Effect) component 1

■ Display information of the on-screen display 3 mode
While playing a disc, the approximate bit rate of the playback picture is always displayed by Mbps (Mega bit per second).

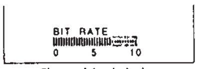

Bit rate of the playback picture

What is bit rate?
Bit rate refers to the amount of video data per second in a disc. The higher the bit rate is, the larger the amount of data. However, this does not always mean that you can get higher quality pictures.

■ Display information of the on-screen display off mode
No information is displayed. (Messages, etc., will be displayed.)

When playing back or stopping a CD/VIDEO CD VIDEO CD CD

Press DISPLAY.

Each time you press the button, the on-screen display changes as follows:

On-screen display 1
↓
On-screen display 2
↓
On-screen display off

■ Display information of the on-screen display 1 mode

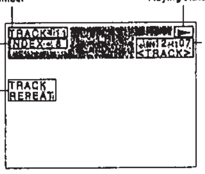

- During PBC playback (VIDEO CD Only)

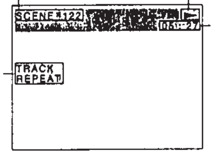

■ Display information of the on-screen display 2 mode

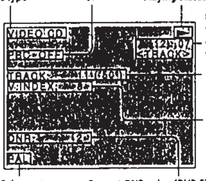

- During PBC playback (VIDEO CD Only)

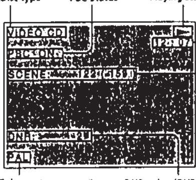

(Continued)

* In display 1 or 2 mode, each time you press TIME, the information changes as shown below.

Playing time of the current track
↓
Remaining time of the current track
↓
Playing time of the disc
↓
Remaining time of the disc

While you are doing Shuffle Play, Program Play, or PBC Playback, the playing time of the disc and the remaining time of the disc are not displayed.

■ Display Information of the on-screen display off mode
No information is displayed. (Messages, etc., will be displayed.)

Using the Front Panel Display

You can check information about the disc, such as the total number of the titles or the tracks or remaining time, using the front panel display.

DVP-S315

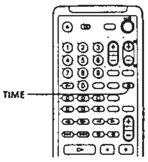

When playing back a DVD

■ Display Information while playing the disc

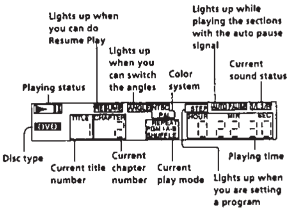

■ Checking the remaining time

Press TIME.
Each time you press TIME while playing the disc, the display changes as shown in the following chart. The time information in the on-screen display 1 or 2 mode also changes each time you press TIME.

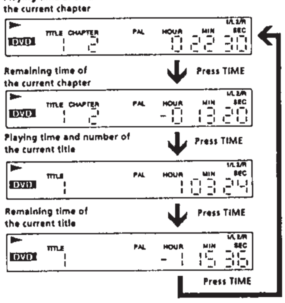

Notes
- Depending on the DVD, the chapter number or time may not appear.
- While you are doing Shuffle Play or Program Play, the playing time of the disc and the remaining time of the disc are not displayed.

When playing back a CD/VIDEO CD

■ Display information while playing a disc

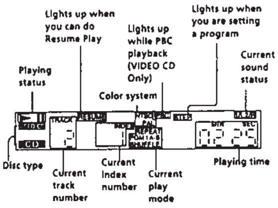

When playing VIDEO CDs with PBC functions
The current scene number is displayed instead of the current track number and the current index number. In this case, the front panel display does not change when you press TIME.

■ Checking the remaining time

Press TIME.
Each time you press TIME while playing a disc, the display changes as shown in the following chart. The time information in the on-screen display 1 and 2 mode also changes each time you press TIME.

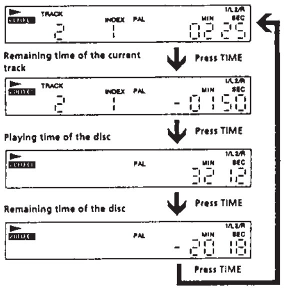

Note
While you are doing Shuffle Play, Program Play, or PBC playback, the playing time of the disc and the remaining time of the disc are not displayed.

Playing Repeatedly (Repeat Play)

You can play the all the titles/tracks on a disc, a single title/chapter/track or a specific portion repeatedly.

DVP-S315

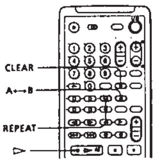

Repeating all the titles or all the tracks on a disc

In Shuffle or Program Play mode, the player repeats the titles or tracks in the shuffled or programmed order.
You cannot do Repeat Play during PBC playback of VIDEO CDs (page 17). You may not be able to do Repeat Play depending on the DVD.

Press REPEAT during playback.
"ALL REPEAT" appears on the screen and "REPEAT" appears on the front panel display. The player repeats the titles/chapters/tracks as follows:

When the disc is played in	The player repeats
Continuous Play (page 10 or 14)	All the titles/all the tracks
Shuffle Play (page 23)	All the titles or tracks in random order
Program Play (page 24)	Programmed titles /chapters /tracks

To cancel repeating all the titles or all the tracks on a disc
Press CLEAR.

Repeating the current title or chapter

You can repeat only the current title or chapter in Continuous Play mode. You may not be able to do Repeat Play depending on the DVD.

■ Repeating the current title
While the title you want is being played, press REPEAT repeatedly until "TITLE REPEAT" appears on the TV screen.
The player repeats the current title.

■ Repeating the current chapter
While the chapter you want is being played, press REPEAT repeatedly until "CHAPTER REPEAT" appears on the TV screen.
The player repeats the current chapter.

"REPEAT 1" appears on the front panel display.

"CHAPTER" is displayed when you select the current chapter

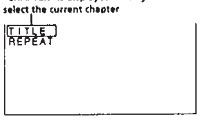

To cancel repeating the current title or chapter
Press CLEAR.

Repeating the current track

You can repeat only the current track in Continuous Play mode.

While the track you want is being played, press REPEAT until "TRACK REPEAT" appears on the TV screen.
"REPEAT 1" appears on the front panel display and the player repeats the current track.

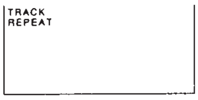

To cancel repeating the current track
Press CLEAR.

Note
Repeat play is canceled when you turn the power off.

Repeating a specific portion (A↔B Repeat)

You can play a specific portion of a title, chapter, track repeatedly. This is useful when you want to memorize lyrics.
During PBC Playback of VIDEO CDs (page 17), this function is available only while playing moving pictures.
You may not be able to do Repeat Play depending on the DVD.

1 During playback, when you find the starting point (point A) of the portion to be played repeatedly, press A↔B.
The starting point (point A) is set. "A-B REPEAT" is appears on the TV screen and "B" flashes.

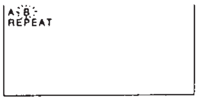

"REPEAT A-" also appears on the front panel display and "B" flashes.

2 When you reach the ending point (point B), press A↔B again.
"A-B REPEAT" on the TV screen disappears and the player starts repeating this specific portion.

"REPEAT A-B" appears on the front panel display during A↔B repeat play.

To cancel A↔B Repeat
Press CLEAR.

To cancel setting halfway
Press CLEAR.

Notes
- A↔B Repeat is canceled when:
  - you open or close the disc tray
  - you turn the power off
- When you set A↔B Repeat, the settings for Shuffle Play and Program Play are canceled.
- You may not be able to set A↔B Repeat, depending on the scene of a DVD or a VIDEO CD.

Playing in Random Order (Shuffle Play)

You can have the player "shuffle" titles, chapters or tracks and play them in a random order.

DVP-S315

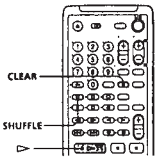

1 Press SHUFFLE.

2 Press ▷.
(During playback, the player starts Shuffle Play when you follow the step 1.)

To cancel Shuffle Play
Press CLEAR.

Notes
- The Shuffle Play is canceled when:
  - you open or close the disc tray
  - you turn the power off
- You may not be able to do Shuffle Play depending on the DVD.

Creating Your Own Program (Program Play)

DVD VIDEO CD CD

You can arrange the order of the titles, chapters or tracks on the disc and create your own program. The program can contain up to 99 titles, chapters and tracks.

DVP-S315

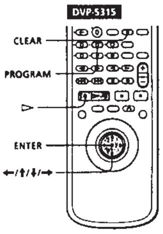

1 Press PROGRAM.
The programming display appears.

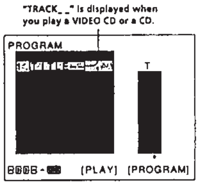

2 Press →.
"01" is highlighted.

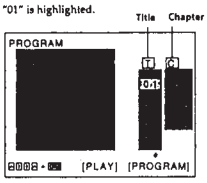

3 Select the title, chapter or track you want to program using ↑/↓, then press ENTER.
For example, select title or track 2.
(You can also use the number buttons and ENTER button to select. In this case, the selected number is displayed on the screen.)

■ **When playing a DVD**
When both titles and chapters are recorded on the disc, select the title, then the chapter.

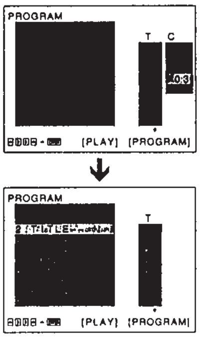

■ **When playing a VIDEO CD or CD**
Select the track you want to program.

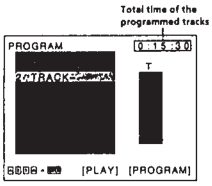

4 To program other titles, chapters or tracks, repeat Step 3.
The programmed titles, chapters or tracks are displayed from 02 in order.

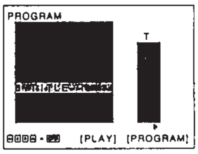

5 Press ▷ to start Program Play.

To cancel Program Play
Press CLEAR.

To cancel programming
Press PROGRAM.

To change programming
1 In Step 2, select the program number of the title, chapter or track you want to change using ↑/↓.
2 Follow Step 3 for new programming.

To cancel the programmed order
To cancel all the titles, chapters or tracks in the programmed order, select "ALL CLEAR" in Step 2.
To cancel the selected program, select the program using ↑/↓ in Step 2 then press CLEAR, or select "- -" in Step 3 then press ENTER.

The program remains even after the Program Play ends
When you press ▷, you can play the same program again.

You can do Repeat Play or Shuffle Play of the programmed titles, chapters or tracks
During Program Play, press REPEAT or SHUFFLE.

Notes
- The number of titles, chapters or tracks displayed are that of the titles, chapters or tracks recorded on a disc.
- The program is canceled when:
  - you open or close the disc tray
  - you turn the power off
- You may not be able to do Program Play depending on the DVD.
- While you are doing PBC playback, you cannot set a program unless you stop playback once.

Resuming Playback from the Point Where You Stopped a Disc (Resume Play)

DVD VIDEO CD CD

The player stores the point where you stopped a disc if "RESUME" appears on the front panel display. In this case, you can resume playback from that point.
As long as you do not open the disc tray, Resume Play is available even if you turn the power off.

DVP-S315

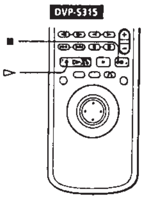

1 While playing a disc, press ■ to stop playback.
"RESUME" appears in the front panel display and "When playing next time, disc restarts from point you stopped." appears on the TV screen.
If "RESUME" does not appear, Resume Play is not available.

2 Press ▷.
The player starts playback from the point you stopped the disc in Step 1.

To play from the beginning of the disc
When "RESUME" appears on the front panel display before you start playing, press ■ to turn off "RESUME," then press ▷.

Notes
- You may not do Resume Play depending on the DVD.
- Resume Play is not available in Shuffle or Program Play mode.
- Depending on where you stopped the disc, the player may resume playback from a different point.
- The point where you stopped playing is cleared when:
  - you open or close the disc tray
  - you disconnect the AC power cord
  - you change the play mode
  - you start playback after selecting a title, chapter or track
  - you change the settings of "DVD MENU", "AUDIO" or "SUBTITLE" in "LANGUAGE SETUP" in the setup display
  - you change the settings of "TV TYPE", "PARENTAL CONTROL" in "INITIAL SETUP 1" in the setup display

Changing the Sounds

DVD VIDEO CD CD

With DVDs on which multilingual sounds are recorded, you can select the language you want while playing the DVD.
With multiplex VIDEO CDs, you can select the sound from the right or left channel and listen to the sound of the selected channel through both the right and left speakers. In this case, the sound loses the stereo effect.

DVP-S315

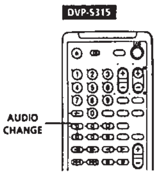

Press AUDIO CHANGE while playing a disc.
Each time you press the button, the indication and the language/sound from the speakers change as follows:

■ **When playing a DVD**

AUDIO 1 → AUDIO 2 → .....

AUDIO
3:ENGLISH

■ **When playing a VIDEO CD or a CD**

1/L : The sound of the left channel
↓
2/R : The sound of the right channel
↓
STEREO (1/L 2/R) : The standard stereo sound

Notes
- Depending on the DVD, you may not be able to change the languages even if multilingual sounds are recorded on the DVD.
- While playing the CD/VIDEO CD, the standard stereo playback will be resumed when:
  - you open or close the disc tray
  - you turn the power off
- While playing the DVD, the sound may be changed when:
  - you open or close the disc tray
  - you change the title
- If the language is displayed as 4 digits number, refer to the language code list in page 48.

Displaying the Subtitles

DVD

With DVDs on which subtitles are recorded, you can turn the subtitles on and off whenever you want while playing the DVD. With DVDs on which multilingual subtitles are recorded, you can change the subtitle language whenever you want while playing the DVD.

DVP-S315

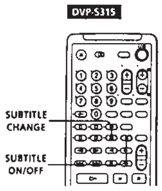

Turning the Subtitles On and Off

Press SUBTITLE ON/OFF while playing a DVD.
Subtitles appear on the TV screen.

To turn off the subtitles
Press SUBTITLE ON/OFF again.

Notes
- When playing the DVD on which no subtitles are recorded, no subtitles appear even if you press SUBTITLE ON/OFF.
- Depending on the DVD, you may not be able to turn the subtitles on even if they are recorded on the DVD.
- Depending on the DVD, you may not be able to turn the subtitles off.
- If the language is displayed as 4 digits number, refer to the language code list in page 48.

Changing the Subtitle Language

When subtitles are turned off, press SUBTITLE ON/OFF to turn on the subtitles.

While playing a DVD, press SUBTITLE CHANGE repeatedly until the subtitles you want appear on the TV screen.

SUBTITLE 1 → SUBTITLE 2 → ...

SUBTITLE
1:ENGLISH

Notes
- The type and number of languages for subtitles vary from disc to disc.
- Depending on the DVD, you may not be able to change the subtitles even if multilingual subtitles are recorded on the DVD.
- While playing the DVD, the subtitle may be changed when:
  - you open or close the disc tray
  - you change the title

Changing the Angles [i] DVD

With DVDs on which various angles (multi-angles) for a scene are recorded, you can change the angles whenever you want while playing the DVD.

DVP-S315

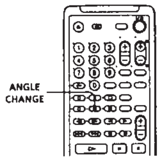

When "ANGLE" appears on the front panel display while playing a DVD, press ANGLE CHANGE repeatedly until you get the angle you want.

ANGLE 1 → ANGLE 2 → ...

You can specify the angle beforehand
Specify the angle when "ANGLE" is not displayed on the front panel display. When a scene on which multi-angles are recorded comes, the angle is automatically selected.

Notes
- The number of angles varies from disc to disc or from scene to scene. The number of angles that can be changed on a scene is that of angles recorded for that scene.
- Depending on the DVD, you may not be able to change the angles even if multi-angles are recorded on the DVD.

Limiting Playback by Children (Parental Control) [i] DVD

Playing some DVDs can be limited depending on the age of users. The "Parental Control" function allows you to set a playback limitation level.

DVP-S315

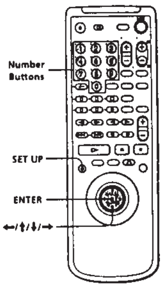

1 Press SET UP to display the setup display on the TV screen before playing.

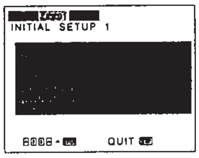

2 Select "INITIAL SETUP 1" using ←/→, then press ↓ or ENTER.

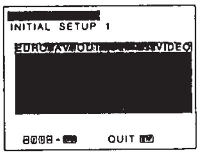

3 Select "PARENTAL CONTROL" using ↑/↓, then press ENTER.

■ **When you have not entered a password yet**
The display for entering a password appears.

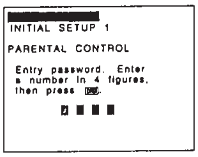

■ **When you have already entered a password**
The display for confirming the password appears. Skip Step 4.

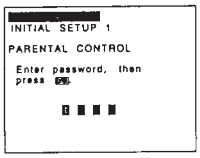

4 Enter a password in 4 figures using the number buttons, then press ENTER.
The figures change to asterisks (✱), and the display for confirming the password appears.

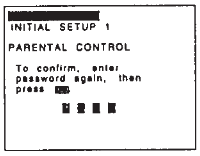

5 To confirm your password, enter it using the number buttons, then press ENTER.
The display for setting the playback limitation level and changing the password appears.

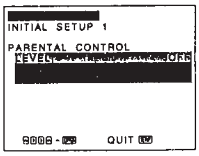

6 Select "STANDARD" using ↑/↓, then press →.

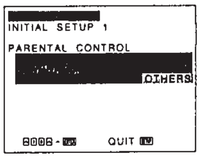

(Continued)

7 Select an area as the standard for playback limitation level using ↑/↓, then press →.
When you select "OTHERS", select and enter the standard code in the table below using number buttons.

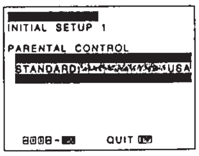

8 Select "LEVEL" using ↑/↓, then press →.

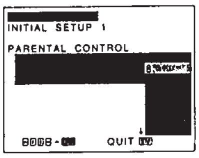

9 Select the level you want using ↑/↓, then press ENTER.

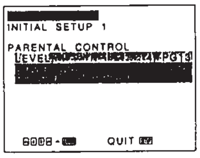

The lower the value is, the more strict the limitation.

To return to the normal screen
Press SET UP.

To turn off the Parental Control function and play the DVD after entering your password
Set "LEVEL" to "OFF" in Step 9, then press ▷.

To change the password
1 In Step 5, select "CHANGE PASSWORD" using ↑/↓, then press → or ENTER.
The display for changing the password appears.
2 Follow Steps 4 and 5 to enter a new password.

If you have forgot your password
Enter 6 digits number "199703" in Step 4 to clear the current password. To enter a new password, follow the procedure from Step 4 again.

Notes
- When you play DVDs which do not have the Parental Control function, playback cannot be limited on this player.
- When you do not set a password, you cannot change the settings for playback limitation.
- Depending on the DVD, you may be asked to change the parental control level while playing the disc. In this case, enter the password, then change the level.
When you stop playing the DVD, the level returns to the original level.

Standard	Code number
Austria	2046
Belgium	2057
Canada	2079
China	2092
Denmark	2115
Finland	2165
France	2174
Germany	2109
Hong Kong	2219
Indonesia	2238
Italy	2254
Japan	2276
Malaysia	2363
Netherlands	2376
Norway	2379
Philippines	2424
Singapore	2501
Spain	2149
Sweden	2499
Switzerland	2086
Taiwan	2543
Thailand	2528
United Kingdom	2184

Controlling the TV or the AV Amplifier (Receiver) with the Supplied Remote [i]

If you adjust the remote signal, you can control your TVs with the supplied remote. Default setting is to control Sony TVs with the ■ mark.
When you connect the player to a Sony AV amplifier, you can also set the input of the amplifier to this player with the supplied remote .

DVP-S315

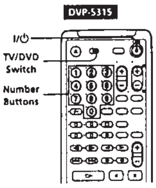

Controlling TVs with the remote

1 Slide TV/DVD switch to TV.
2 Hold down I/⏻, and enter your TV's manufacturer's code in the table below using the number buttons. Then release I/⏻.

Code numbers of controllable TVs
If more than one code number is listed, try entering them one at a time until you find the one that works with your TV.

Notes
- If you enter a new code number, the code number previously entered will be erased.
- When you replace the batteries of the remote commander, the code number automatically resets to 01 (Sony). Reset the appropriate code number.

Manufacturer	Code number
Sony (default)	01
Grundig	11
Hitachi	24
Loewe	45
Nokia	15,16,69
Panasonic	17,49
Philips	06,07,08
Saba	12,13
Samsung	22,23
Sanyo	25
Sharp	29
Telefunken	36
Thomson	43
Toshiba	38

(Continued)

When you set the TV/DVD switch to TV, you can control your TV using the keys below.

DVP-S315

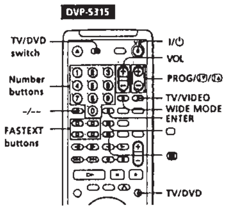

By pressing	You can
I/⏻	Turn on or off the TV
TV/VIDEO	Select the input source for the TV
TV/DVD*	Return the input source for the TV to the TV
VOL	Adjust the volume of the TV
PROG	Select the programme position of the TV
▢ (TV)	Switch to TV (Teletext off)
▣ (Teletext)	Switch to Teletext
FASTEXT buttons	Use FASTEXT
Ⓟ/Ⓐ	Change the Teletext page
WIDE MODE	Switch the wide picture mode on or off
Number buttons and ENTER	Select the programme position of the TV

* If you connect the player to the TV via the EURO AV OUT connectors, the input source for the TV is set to the player automatically when you start playback or press any button except for I/⏻. In this case, press TV/DVD to return the input to the TV.

Notes
- Depending on the TV, you may not be able to control your TV or to use some buttons above.
- If you use number buttons to select programme position of the TV, press -/-- followed by the number buttons for two-digit numbers.

Controlling a Sony AV amplifier with the remote

1 Slide TV/DVD switch to DVD.

2 Hold down I/⏻, and enter your AV amplifier's input connector code (see the table below) using the number buttons.* Then release I/⏻.

Amplifier connector	Code number
VIDEO 1	91
VIDEO 2	92
VIDEO 3	93
AUX 1	94
LD/DVD (default setting)	95
AC-3	96
TV	97

* If you connect the player to the SONY Mini Hi-Fi Component system, enter "98".

When you press AV CENTER on the supplied remote, you can set the input of AV amplifier to the player.** You can also change the volume of the sound using AV VOL.

DVP-S315

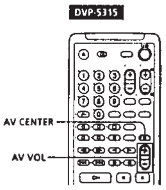

** If you connect the player to the SONY Mini Hi-Fi Component system, press AV CENTER repeatedly to change the input of the system.

Note
Depending on the AV receiver, you may not be able to control your AV receiver.

Using the Setup display 🅸

Using the setup display, you can do the initial setup, adjusting the picture and sound quality, setting the various outputs, etc. You can also set a language for the subtitles and the setup display, limit playback by children, etc.
For details on each setup display item, see pages 34 to 36.
The setup display items are listed in page 47.

DVP-S315

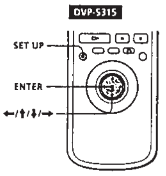

1 Press SET UP to display the setup display on the TV screen.

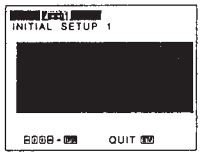

2 Select the main item you want using ←/→, and then press ENTER.
The selected main item is highlighted.

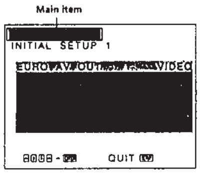

3 Select the item you want using ↑/↓, then press → or ENTER.

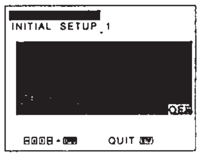

4 Select the setting you want using ↑/↓, then press ENTER.

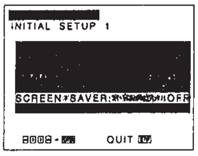

To cancel using the setup display on the way
Press SET UP.

Note
Some setup display items require operations other than selecting the setting. For details on these items, see the relevant pages.

Setting the Language for Display and Sound (LANGUAGE SETUP)

Select "🗨" after pressing SET UP.
"LANGUAGE SETUP" allows you to set various languages for on-screen display or sound.
Default settings are underlined.

Note
When you select a language that is not recorded on the DVD, one of the recorded languages is automatically selected except for "OSD".

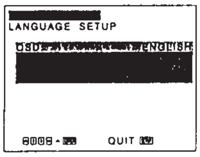

■ **OSD (On-Screen Display)**
Switches the language for the on-screen display.
- <u>ENGLISH</u>
- DEUTSCH
- FRANÇAIS
- ITALIANO
- ESPAÑOL
- NEDERLANDS
- PORTUGUÊS
- SUOMI
- SVENSKA
- DANSK

■ **DVD MENU**
Switches the language for the DVD menu.
- <u>ENGLISH</u>
- DEUTSCH
- FRANÇAIS
- ITALIANO
- ESPAÑOL
- NEDERLANDS
- PORTUGUÊS
- SUOMI
- SVENSKA
- DANSK
- OTHERS→
  When you select "OTHERS," select and enter the language code from the list using the number buttons (page 48).

■ **AUDIO**
Switches the language for the sounds.
- <u>ORIGINAL</u> : the language given the priority in the disc
- ENGLISH
- DEUTSCH
- FRANÇAIS
- ITALIANO
- ESPAÑOL
- NEDERLANDS
- PORTUGUÊS
- SUOMI
- SVENSKA
- DANSK
- OTHERS→
  When you select "OTHERS," select and enter the language code from the list using the number buttons (page 48).

■ **SUBTITLE**
Switches the language for the subtitles.
- <u>AUDIO FOLLOW</u>*
- ENGLISH
- DEUTSCH
- FRANÇAIS
- ITALIANO
- ESPAÑOL
- NEDERLANDS
- PORTUGUÊS
- SUOMI
- SVENSKA
- DANSK
- OTHERS→
  When you select "OTHERS," select and enter the language code from the list using the number buttons (page 48).

* When you select "AUDIO FOLLOW," the language for the subtitles change according to the language for the sound.

Settings for Display (INITIAL SETUP 1)

Select "▭ 1" after pressing SET UP.
"INITIAL SETUP 1" allows you to set the display according to the playback conditions.
Default settings are underlined.

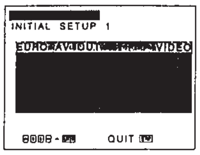

■ **EURO AV OUT**
Selects the methods of outputting video signals from the EURO AV 1(RGB)-TV connectors on the rear panel of the player.
- <u>VIDEO</u>: outputs the video signals.
- S VIDEO: outputs the S video signals.
- RGB: outputs the RGB signals.

Note
If your TV is not conformed to the S video or the RGB signals, no picture appears on the TV screen even if you select "S VIDEO" or "RGB." Refer to the instructions supplied with your TV.

■ **TV TYPE**
Selects the aspect ratio of the TV to be connected.
- <u>16:9</u>: when you connect a wide-screen TV to the player.
- 4:3 LETTER BOX: when you connect a normal TV to the player. Displays the wide picture with bands displayed on the upper and lower portions of the screen.
- 4:3 PAN SCAN : when you connect a normal TV to the player. Displays the wide picture on the whole screen with a portion automatically cut off.

16:9

4:3 LETTER BOX

4:3 PAN SCAN

Note
Depending on the DVD, "4:3 LETTER BOX" may be selected automatically instead of "4:3 PAN SCAN" and vice versa.

■ **AUTO PLAY**
Selects the setting of Auto Play when you connect the AC power cord to the AC outlet.
- <u>OFF</u>: does not use "TIMER", "DEMO1" or "DEMO2" to start playing.
- TIMER: starts playing a disc automatically when you connect the AC power cord to the AC outlet. By connecting a timer (not supplied), you can start playing at any time you want.
- DEMO1: starts playing the demonstration 1 automatically.
- DEMO2: starts playing the demonstration 2 automatically.

■ **DIMMER**
Adjusts the lighting of the front panel display.
- <u>BRIGHT</u>: makes the front panel display bright.
- DARK: makes the front panel display dark.
- OFF: turns off the lighting of the front panel display.

■ **BACKGROUND**
Selects the background color of the TV screen in stop mode.
- <u>BLUE</u>: The background color is blue.
- BLACK: The background color is black.

■ **SCREEN SAVER**
Turns on and off the screen saver. If you turn on the screen saver, the screen saver image appears when you leave the player or the remote in pause mode for 15 minutes. The screen saver is useful to prevent your display from damage.
- <u>ON</u>: turns on the screen saver.
- OFF: turns off the screen saver.

■ **PARENTAL CONTROL**
Sets a password and playback limitation level when you play DVDs with playback limitation for children.
For details, see page 28.

Settings for Sound (INITIAL SETUP 2)

Select "2" after pressing SET UP.
"INITIAL SETUP 2" allows you to set the sound according to the playback conditions.
Default settings are underlined.

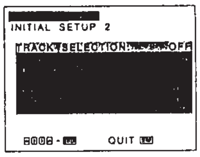

■ **TRACK SELECTION**
Gives the MPEG AUDIO and the Dolby Digital (AC-3) format priority when you play a DVD on which multiple audio formats are recorded. If multiple audio channels are recorded in MPEG AUDIO or Dolby Digital (AC-3) format, the higher-numbered channel audio recorded in MPEG AUDIO or Dolby Digital (AC-3) format is played.
- <u>OFF</u>: No priority given.
- AUTO: Priority given.

Notes
- When you set this item to "ON", the language may change depending on the "AUDIO" settings in "LANGUAGE SETUP." The "TRACK SELECTION" setting has higher priority than that of "AUDIO" settings in "LANGUAGE SETUP" (page 34).
- If the number of the highest channels of the MPEG AUDIO sound tracks is the same as the one of the DOLBY DIGITAL (AC-3) sound tracks, the priority is given to the MPEG AUDIO sound tracks.
- Depending on the DVD, the audio with priority may be predetermined. In this case, you cannot give priority to the MPEG AUDIO or Dolby Digital (AC-3) format by selecting "AUTO."

■ **SURROUND**
Switches the mixing down methods when you play a DVD on which the sound in Dolby Digital (AC-3) format is recorded.
- <u>ON</u>: when the player is connected to an audio component that conforms to Dolby surround, Dolby Pro Logic surround, etc.
- OFF : when the player is connected to a normal audio component.

■ **DIGITAL OUT**
Switches the methods of outputting audio signals from the DIGITAL OUT OPTICAL and COAXIAL connectors on the rear panel of the player.
- <u>PCM</u>: when the player is connected to an audio component without a built-in MPEG AUDIO or Dolby Digital (AC-3) decoder.
  If you play the MPEG AUDIO or the Dolby Digital (AC-3) sound tracks, the output signal is stereo. You can select the surround effect by setting the item "SURROUND" to "ON" or "OFF."
- MPEG: when the player is connected to an audio component with a built-in MPEG AUDIO decoder.
  If you play the Dolby Digital (AC-3) sound tracks, the output signal is stereo.
- DOLBY DIGITAL: when the player is connected to audio component with a built-in Dolby Digital (AC-3) decoder.
  If you play the MPEG sound tracks, the output signal is stereo.
- DOLBY DIGITAL/MPEG: when the player is connected to audio component with a built-in Dolby Digital (AC-3)/MPEG AUDIO decoder.
  The player outputs the appropriate signals automatically, when you play a DVD.

Note
Select the setting correctly. Otherwise, no sound or strange sound will come out from the speakers, affecting your ears or causing the speakers to be damaged.

■ **AUDIO DRC (Dynamic Range Control)**
Makes the sound clear with the volume turned down at night, etc. when you play a DVD. This affects the output from the DIGITAL OUT connectors when "DIGITAL OUT" in "INITIAL SETUP 2" is set to "PCM," the output from the LINE OUT (AUDIO) and EURO AV (1, 2) connectors.
- <u>OFF</u>: Normally select this position.
- ON: makes the sound clear even if you turned the volume down.

Note
When you play DVDs without the AUDIO DRC function, there may be no effect on the sound.

■ **AUDIO ATT (attenuation)**
Selects the setting of the output from the LINE OUT (AUDIO) and EURO AV (1, 2) connectors according to audio equipment to be connected.
- <u>OFF</u>: turns off the audio attenuation.
- ON: reduces the audio output level so that no sound distortion occurs.

Note
The setting does not affect the output from the DIGITAL OUT connectors.

■ **AUDIO FILTER (DVP-S715 only)**
Selects the type of digital filter to reduce the noise higher frequency than 22.05kHz (fs 44.1kHz), 24kHz (fs 48kHz) or 48kHz (fs 96kHz).
- <u>SHARP</u>: makes the sound clear and provides smooth sound reproduction. Normally set this position.
- SLOW: makes the sound warm and deep.

Note
Depending on the disc, there may be no effect on the sound.

Precautions

On safety
- Caution – The use of optical instruments with this product will increase eye hazard.
- Should any solid object or liquid fall into the cabinet, unplug the player and have it checked by qualified personnel before operating it any further.

On power sources
- The player is not disconnected from the AC power source (mains) as long as it is connected to the wall outlet, even if the player itself has been turned off.
- If you are not going to use the player for a long time, be sure to disconnect the player from the wall outlet. To disconnect the AC power cord (mains lead), grasp the plug itself; never pull the cord.
- Should the AC power cord (mains lead) need to be changed, have it done at a qualified service shop only.

On placement
- Place the player in a location with adequate ventilation to prevent heat build-up in the player.
- Do not place the player on a soft surface such as a rug that might block the ventilation holes on the bottom.
- Do not place the player in a location near heat sources, or in a place subject to direct sunlight, excessive dust or mechanical shock.

On operation
- If the player is brought directly from a cold to a warm location, or is placed in a very damp room, moisture may condense on the lenses inside the player. Should this occur, the player may not operate properly. In this case, remove the disc and leave the player turned on for about half an hour until the moisture evaporates.

On adjusting volume
- Do not turn up the volume while listening to a portion with very low level inputs or no audio signals. If you do, the speakers may be damaged when a peak level portion is played.

On cleaning
- Clean the cabinet, panel and controls with a soft cloth slightly moistened with a mild detergent solution. Do not use any type of abrasive pad, scouring powder or solvent such as alcohol or benzine.

If you have any questions or problems concerning your player, please consult your nearest Sony dealer.

IMPORTANT NOTICE
Caution: The enclosed DVD Player is capable of holding a still video image or Setup display image on your television screen indefinitely. If you leave the still video image or Setup display image displayed on your TV for an extended period of time you risk permanent damage to your television screen. Projection televisions are very susceptible.

Notes on Discs

On handling discs
- To keep the disc clean, handle the disc by its edge. Do not touch the surface.
- Do not stick paper or tape on the disc.
  If there is glue (or a similar substance) on the disc, remove the glue completely before using the disc.

Not this way

- Do not expose the disc to direct sunlight or heat sources such as hot air ducts, or leave it in a car parked in direct sunlight as there can be considerable rise in temperature inside the car.
- After playing, store the disc in its case.

On cleaning
- Before playing, clean the disc with a cleaning cloth. Wipe the disc from the center out.

- Do not use solvents such as benzine, thinner, commercially available cleaners or anti-static spray intended for vinyl LPs.

Index to Parts and Controls

Refer to the pages indicated in parentheses for details.

Front Panel

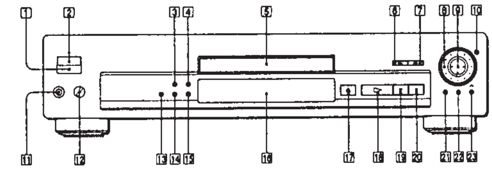

1 ■ (remote sensor) (6)
Accepts the remote control signals.

2 ON/STANDBY switch and indicator (10, 14)
Turns on and off the power of the player.

3 SHUFFLE button (23)
Press to execute the shuffle play.

4 REPEAT button (22)
Press to execute the repeat play.

5 Disc tray (10, 14)
Place a disc on the tray.

6 ⏮ PREV button (11, 15)
Press to go back to the preceding chapter or track.

7 ⏭ NEXT button (11, 15)
Press to go to the next chapter or track.

8 Click shuttle (12, 16)
Changes the playback speed.

9 ←/↑/↓/→ / ENTER button
Selects and executes the items or settings.

10 JOG button / indicator (12, 16)
Press to play a disc frame by frame.

11 PHONES connector (10, 14)
Connect the headphones to this connector.

12 PHONE LEVEL control (10, 14)
Adjusts the headphone volume.

13 DNR button (DVP-S715 only) (26)
Reduces the picture noise.

14 PROGRAM button (24)
Press to execute the program play.

15 CLEAR button (11, 15, 22, 23, 24)
Press to return to the continuous play etc.

16 Front Panel Display (20)
Indicates the playing time, etc.

17 ⏏OPEN/CLOSE button (10, 14)
Opens or closes the disc tray.

18 ▷PLAY button (10, 14)
Plays a disc.

19 ❚❚PAUSE button (11, 15)
Pauses playing a disc.

20 ■STOP button (11, 15, 25)
Stops playing a disc.

21 TITLE button (13)
Displays the title menu on the TV screen.

22 DVD MENU button (13)
Displays the DVD menu on the TV screen.

23 ↶ RETURN button (17)
Press to return to the preceding selection screen, etc.

Rear Panel

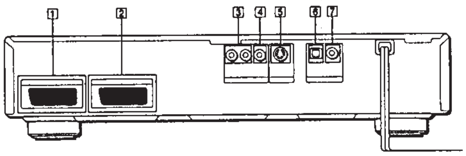

1 EURO AV 1 (RGB)-TV connector (7, 35)
Connects to the TV with EURO AV connector to output the signal from the player. You can select the video signals, the S VIDEO signals or the RGB signals as output signal format. Choose the appropriate one. (page 35)

2 EURO AV 2 connector (7)
Connects to the video equipment with EURO AV connector to input the signal from the equipment.

3 LINE OUT (AUDIO) connectors (7)
Connects to the audio input connector on the TV or amplifier.

4 LINE OUT (VIDEO) connector (7)
Connects to the video input connector on the TV or monitor.

5 S VIDEO OUT connector (7)
Connects to the S video input connector on the TV or VCR.

6 DIGITAL OUT (OPTICAL) connector (8)
Connects to an audio component using the optical digital connecting cord.

7 DIGITAL OUT (COAXIAL) connector (8)
Connects to an audio component using the coaxial digital connecting cord.

Remote (DVP-S315)

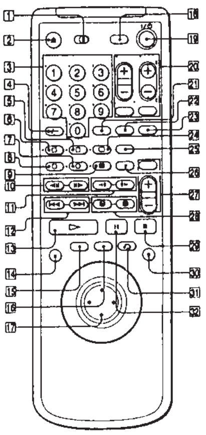

[1] TV/DVD switch (31)
Selects to control the player or the TV with the remote.

[2] ≜OPEN/CLOSE button (11, 15)
Opens or closes the disc tray.

[3] Number buttons (12, 16)
Selects the items or settings.

[4] SEARCH MODE / -/-- (ten's digit) button (11, 15, 32)
Press to select the unit for search (track, index, etc.)

[5] PROGRAM / FASTEXT button (24, 32)
Press to execute the program play.

[6] SHUFFLE / FASTEXT button (23, 32)
Press to execute the shuffle play.

[7] ANGLE CHANGE / FASTEXT button (28, 32)
Changes the angles when playing a DVD.

[8] AUDIO CHANGE / FASTEXT button (26, 32)
Changes the sound while playing a DVD or VIDEO CD.

[9] SUBTITLE CHANGE / ⊜ (TV Teletext) button (27, 32)
Changes the subtitles when playing a DVD.

[10] ◄II/II► STEP buttons (12, 16)
Plays a disc frame by frame.

[11] ◄I / I► SLOW buttons (12, 16)
Plays a disc in slow motion.

[12] I◄◄/►►I PREV/NEXT buttons (11,15)
Press to go to the next chapter or track or to go back to the preceding chapter or track.

[13] ▷ PLAY button (10, 14)
Plays a disc.

[14] SET UP button (33)
Displays the setup display on the TV screen to set or adjust the items.

[15] TITLE button (13)
Displays the title menu on the TV screen.

[16] DVD MENU button (13)
Displays the DVD menu on the TV screen.

[17] ←/↑/↓/→ / ENTER button
Selects and executes the items or settings.

[18] DISPLAY button (18)
Displays the current playing status on the TV screen.

[19] I/⏻ button (14, 31)
Turns on and off the power of the player.

[20] TV operation buttons (32)
Controls TVs.

[21] ENTER button
Executes the items or settings.

[22] CLEAR button (22, 23, 24)
Press to return to the continuous play etc.

[23] TIME button (18, 20)
Displays the playing time of the disc, etc., on the front panel display.

[24] REPEAT / ◯ (TV Teletext) button (22, 32)
Press to execute the repeat play.

[25] A↔B button (22)
Press to execute the A↔B repeat play.

[26] SUBTITLE ON/OFF button (27)
Turns the subtitles on and off when playing a DVD.

[27] Amplifier operation buttons (32)
Controls Sony AV amplifiers.

[28] ⊖/⊖SCAN buttons (11, 15)
Locates a point while monitoring the picture or sound.

[29] ■STOP button (11, 15, 25)
Stops playing a disc.

[30] TV/DVD button (32)
Returns the input for the TV to the TV.

[31] ↶RETURN button (17)
Press to return to the preceding selection screen, etc.

[32] IIPAUSE button (11, 15)
Pauses playing a disc.

SECTION 2
DISASSEMBLY

Note: Follow the disassembly procedure in the numerical order given.

2-1. CASE REMOVAL

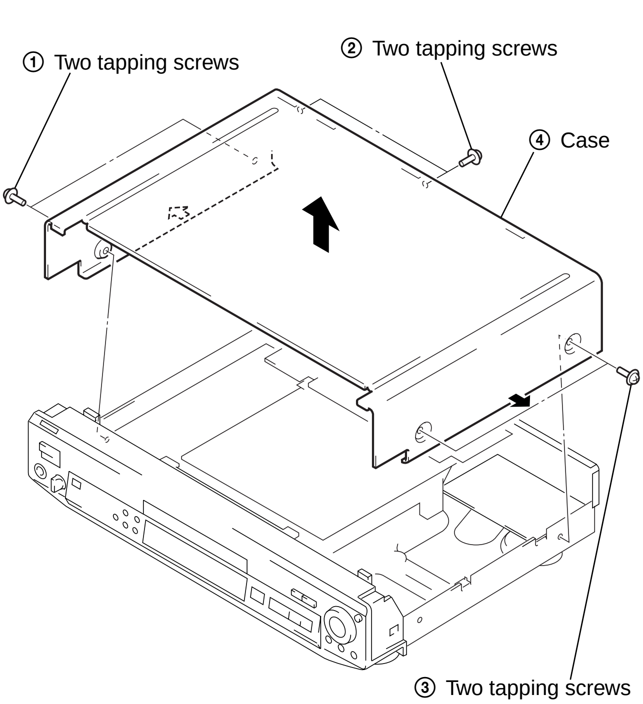

2-3. MB-78 BOARD REMOVAL

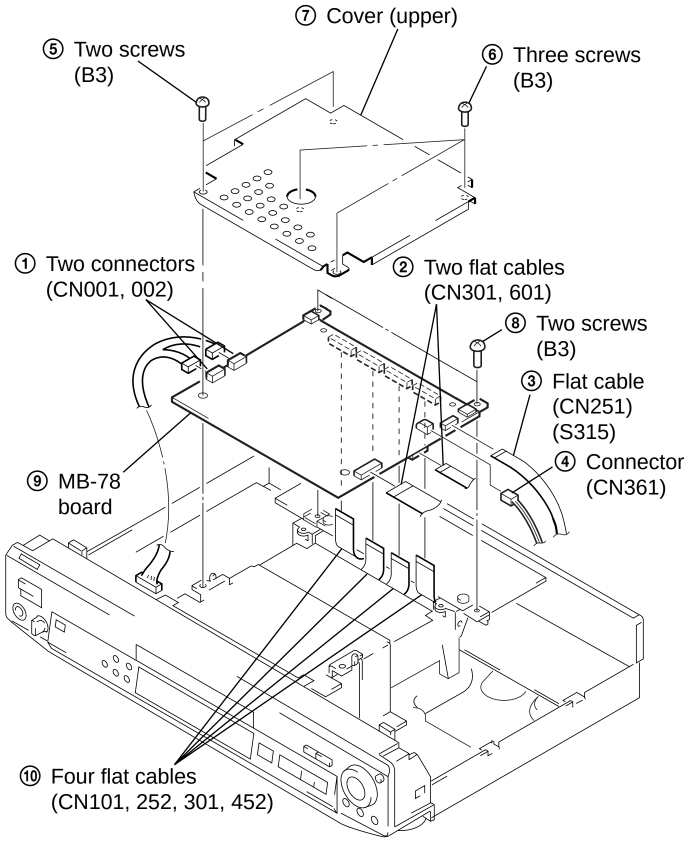

2-2. FRONT PANEL SECTION REMOVAL

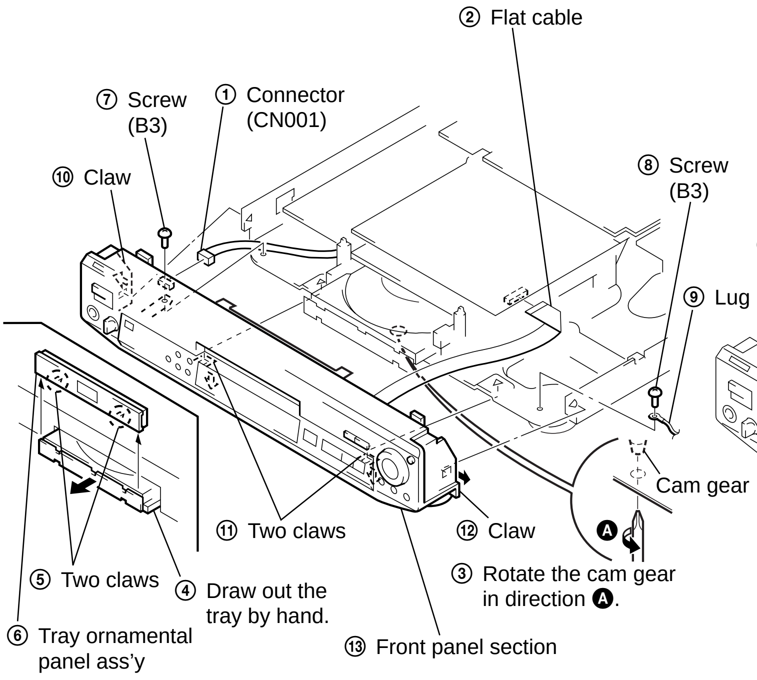

2-4. AU-197 BOARD REMOVAL

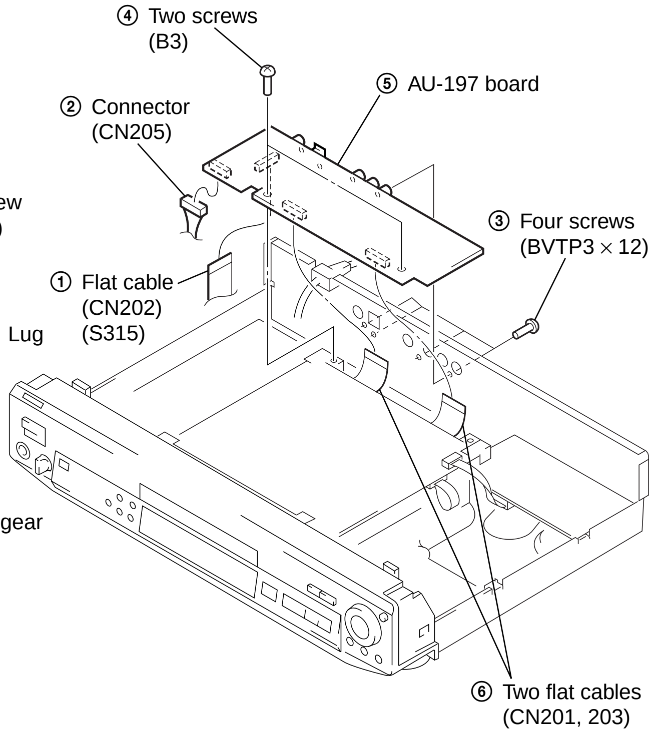

2-5. MD BLOCK ASS'Y REMOVAL

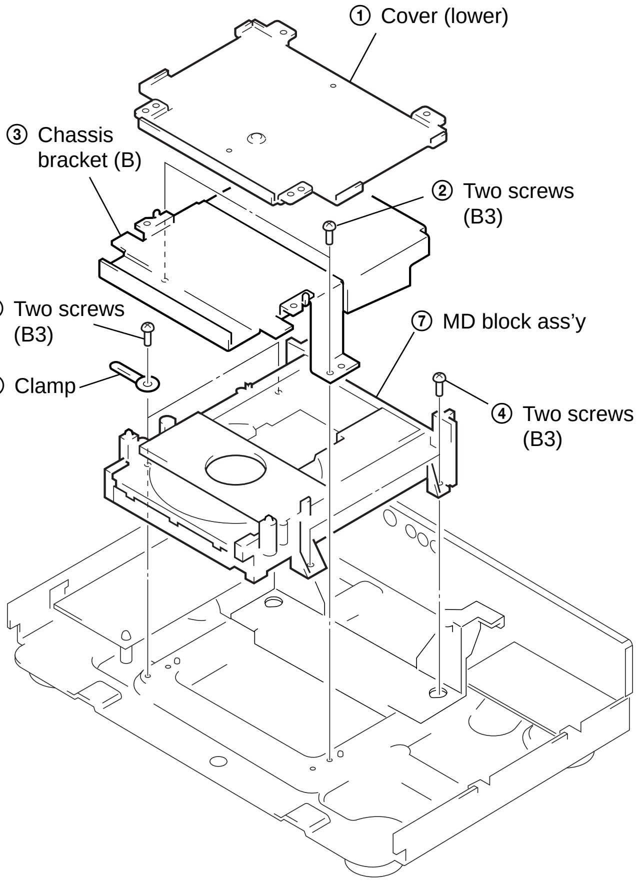

2-7. TRAY REMOVAL

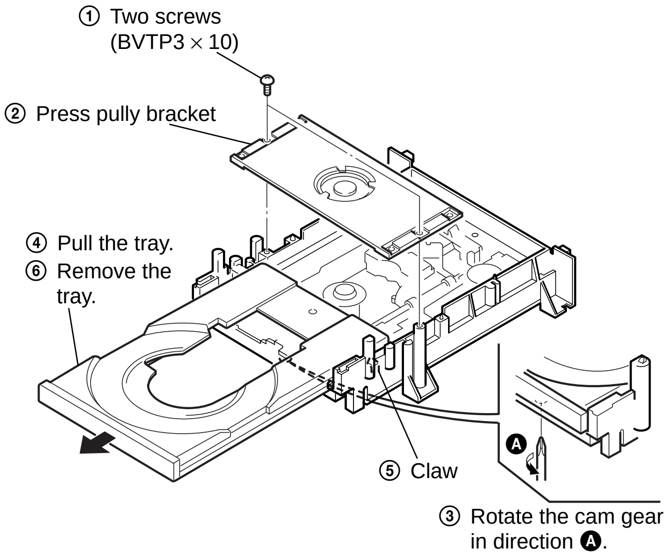

2-6. TK-47 BOARD REMOVAL

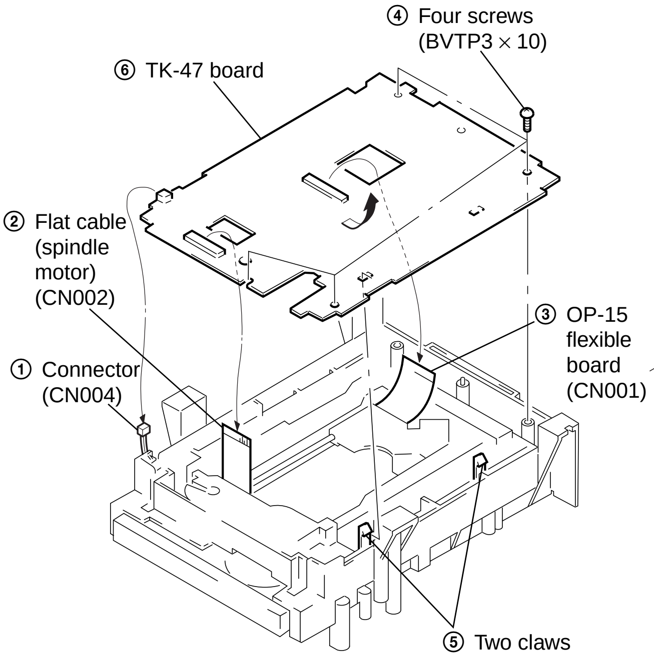

2-8. SKEW MOTOR (M902) REMOVAL

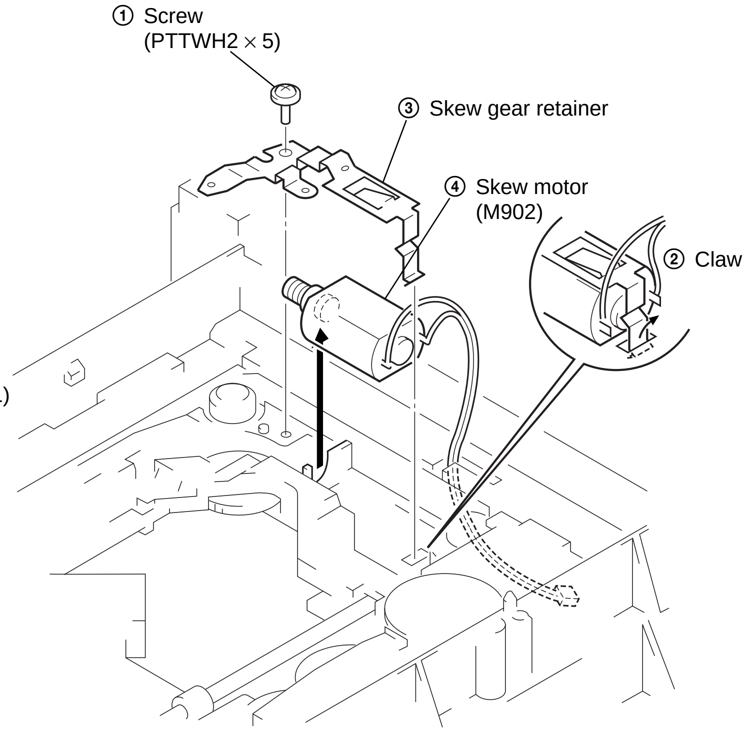

2-9. SLED MOTOR (M501) REMOVAL

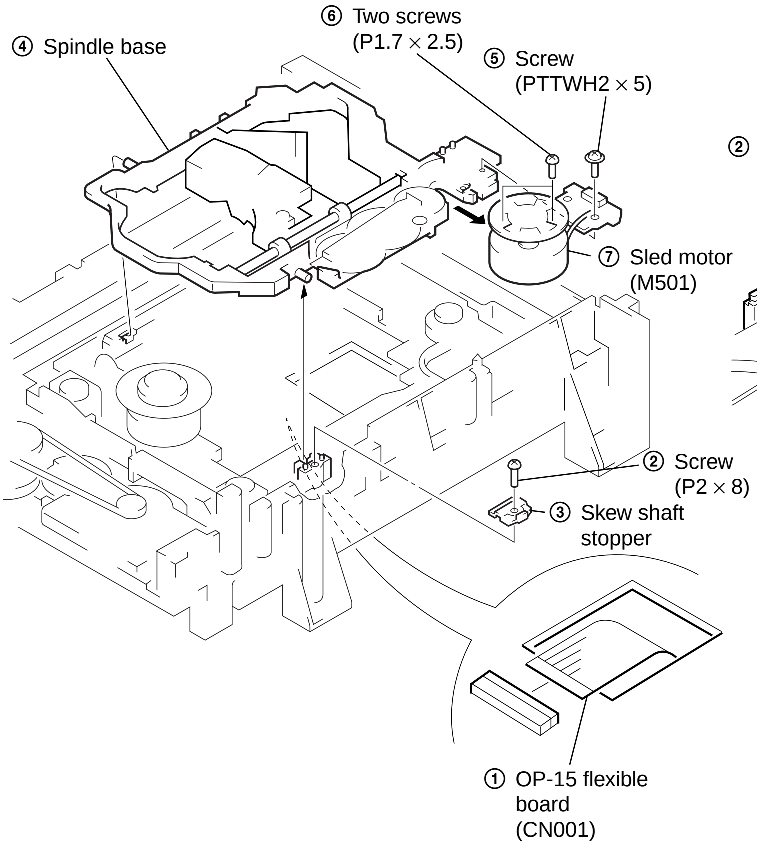

2-10. SPINDLE MOTOR (M901) REMOVAL

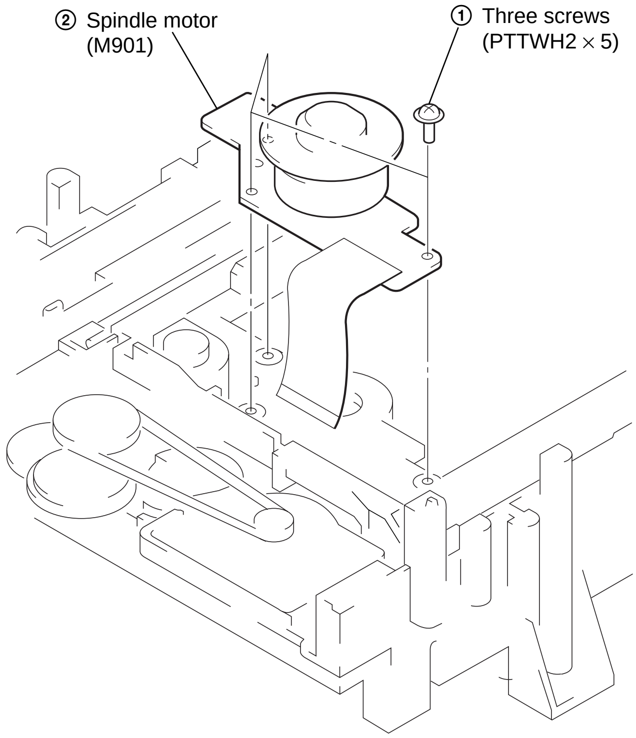

2-11. OPTICAL PICK-UP REMOVAL

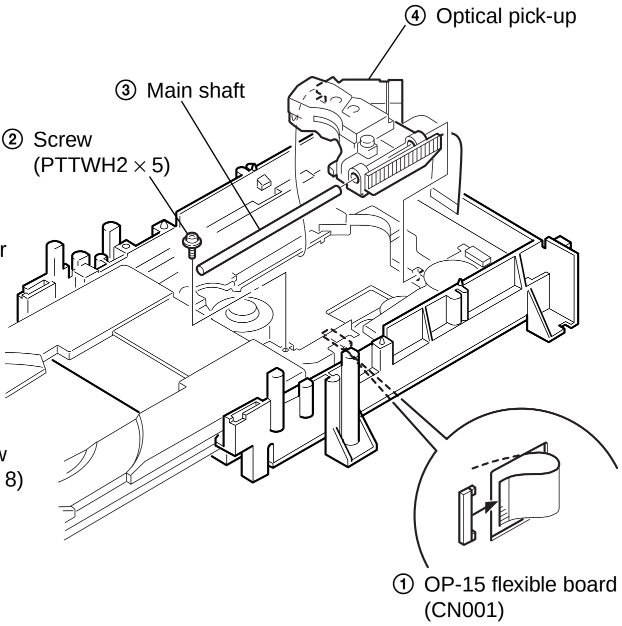

2-12. INTERNAL VIEWS

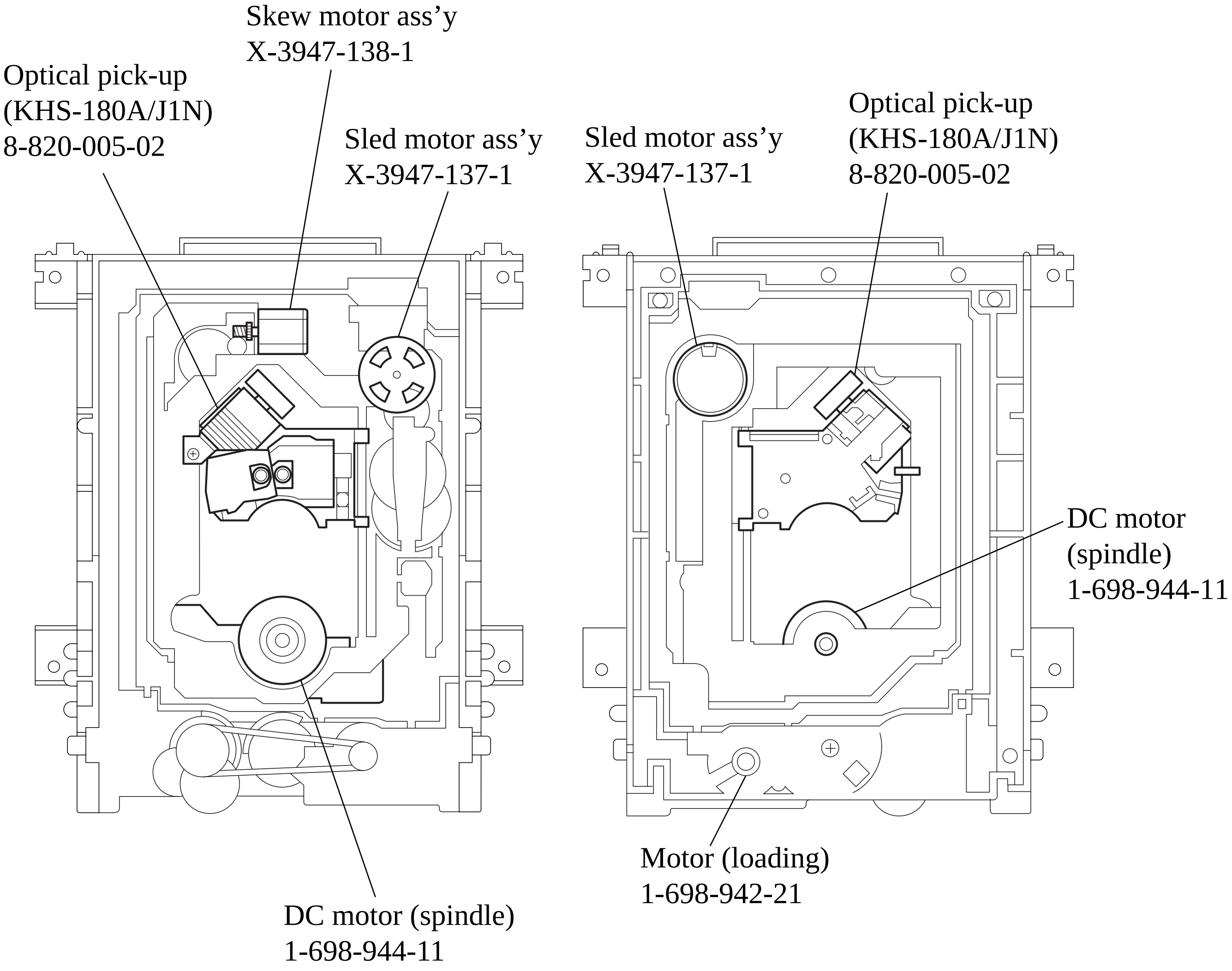

2-13. CIRCUIT BOARDS LOCATION

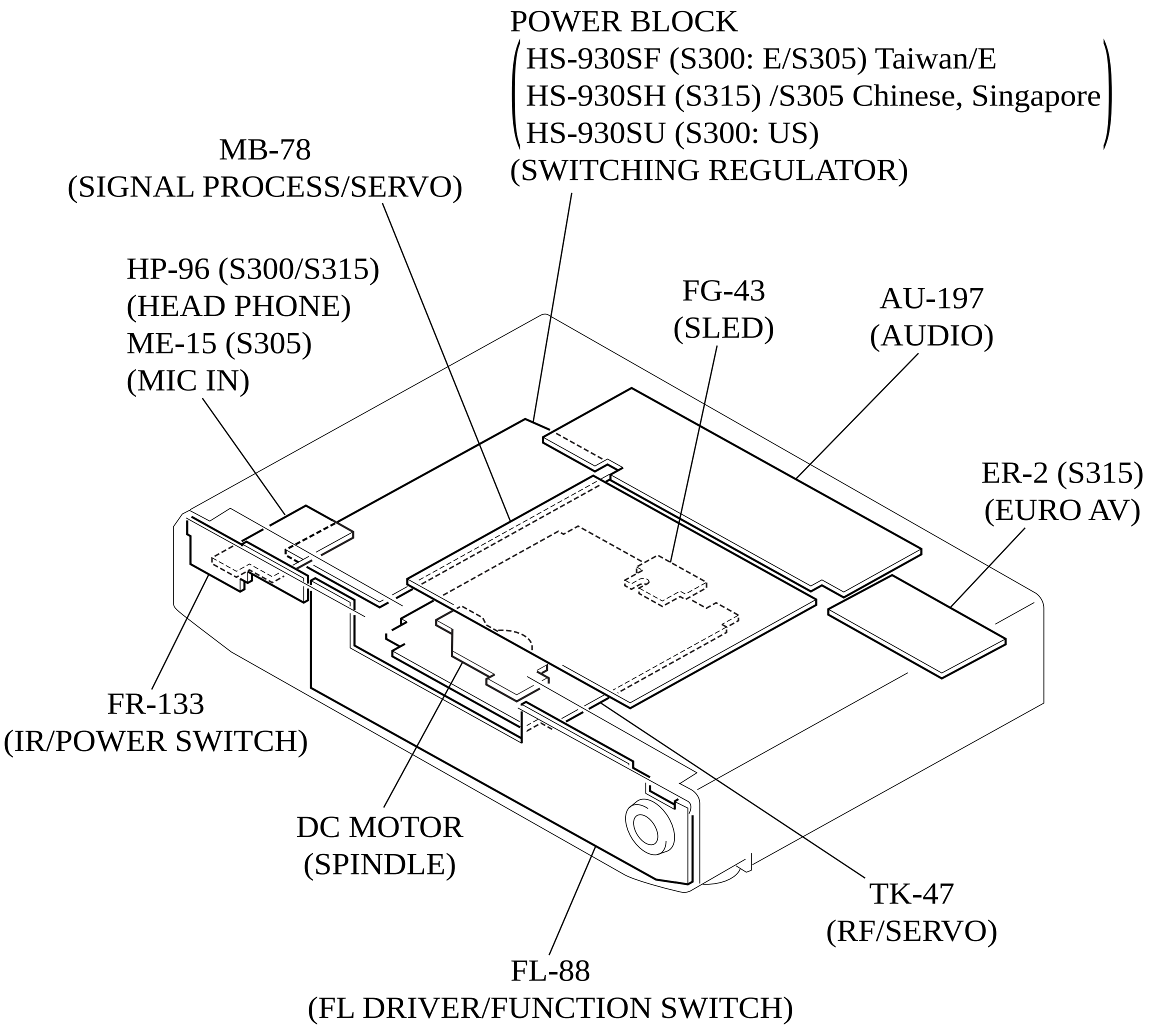

SECTION 3
BLOCK DIAGRAMS

3-1. BLOCK DIAGRAM 1 (RF, SERVO, POWER)

3-2. BLOCK DIAGRAM 2 (SIGNAL PROCESS)

SECTION 4
PRINTED WIRING BOARDS AND SCHEMATIC DIAGRAMS

THIS NOTE IS COMMON FOR PRINTED WIRING BOARDS AND SCHEMATIC DIAGRAMS.
(In addition to this, the necessary mote is printed in each block.)

For printed wiring boards:
- ○—— : indicates a lead wire mounted on the component side.
- ●—— : indicates a lead wire mounted on the printed side.
- ○ : Through hole.
- ■ : Parts mounted on the conductor side.
- ░ : Pattern from the side which enables seeing.
- ░ : Pattern on the rear side.*
- Circled numbers refer to waveforms.

Caution:	
Pattern face side: (Conductor Side)	Parts on the pattern face side seen from the pattern face are indicated.
Parts face side: (Component Side)	Parts on the parts face side seen from the parts face are indicated.

For schematic Diagram:
- Caution when replacing chip parts. New parts must be attached after removal of chip. Be careful not to heat the minus side of tantalum capacitor, because it is damaged by the heat.
- All resistors are in ohms, $^{1}/_{4}$ W (Chip resistors : $^{1}/_{10}$ W) unless otherwise specified. kΩ : 1000Ω, MW : 1000kΩ.
- All capacitors are in μF unless otherwise noted. pF : μμF 50V or less are not indicated except for electrolytics and tantalums.
- All variable and adjustable resistors have characteristic curve B, unless otherwise noted.
- : nonflammable resistor.
- : fusible resistor.
- : panel designation.
- △ : internal component.
- : adjustment for repair.*
- ━━ : B+ Line.*
- ━ ━ : B– Line.*
- ⇨ : IN/OUT direction of B line (+, –).*
- Circled numbers refer to waveforms.*
- Voltages are dc between measurement point.*
- Readings are taken with a color-bar signals on DVD reference disc and when plying CD reference disc.*
- Readings are taken with a digital multimeter (DC 10MW).*
- Voltage variations may be noted due to normal production tolerances.*

Note: The components identified by mark ⚠ or dotted line with mark ⚠ are critical for safety. Replace only with part number specified.

When indicating parts by reference number, please include the board name.

- * : indicated by the color red.

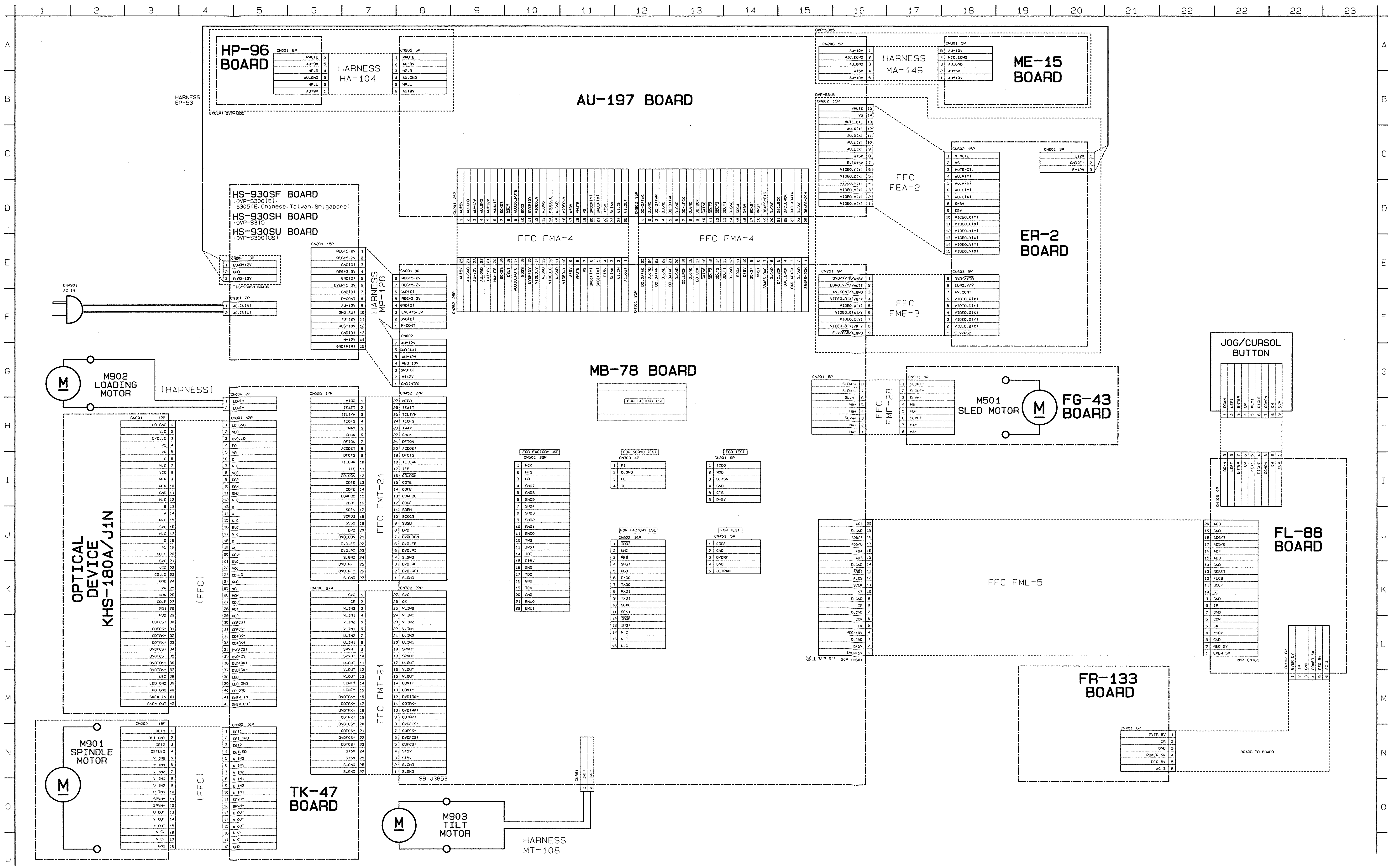

4-2. PRINTED WIRING BOARDS AND SCHEMATIC DIAGRAMS

TK-47 (RF, SERVO) PRINTED WIRING BOARD

– Ref. No.: TK-47 board; 3,000 series –

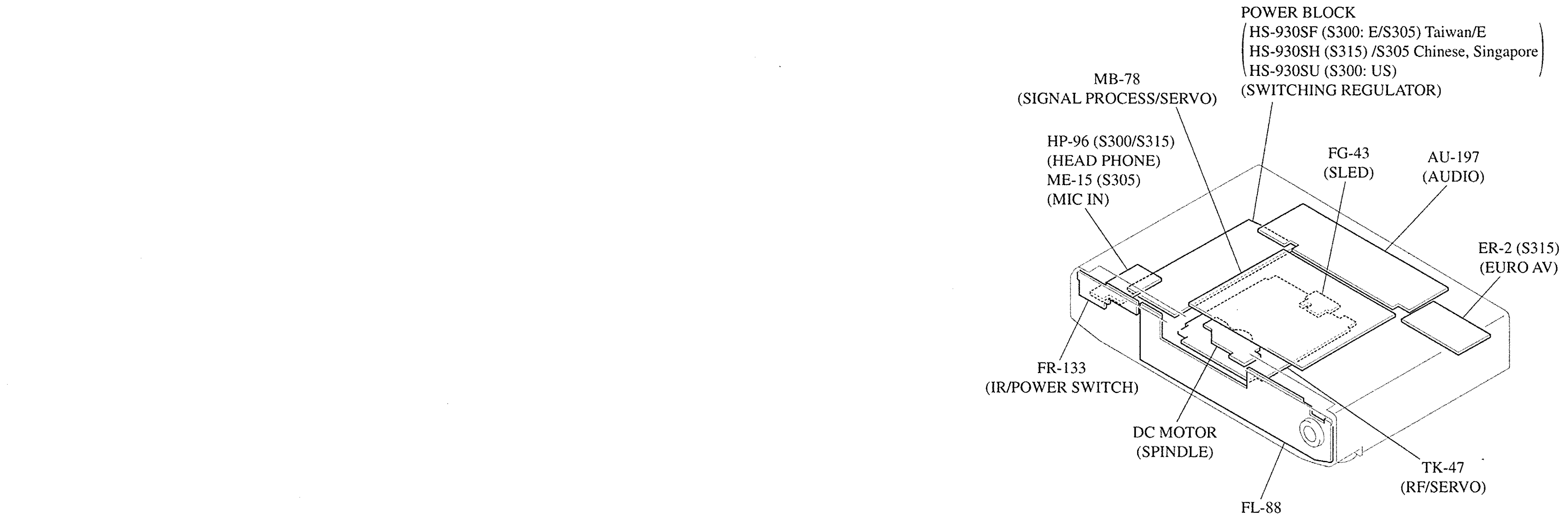

TK-47 BOARD

CN001	D-3
CN002	H-2
CN004	G-1
CN005	B-4
CN008	B-3
D003	C-4
D004	E-2
IC004	C-4
IC005	D-4
IC006	F-3
IC011	E-5
Q001	E-2
Q004	E-2
Q005	E-2
Q007	D-4
Q008	F-3
Q009	F-3
Q010	D-3

There are few cases that the part isn't mounted in this model is printed on this diagram.

TK-47 BOARD

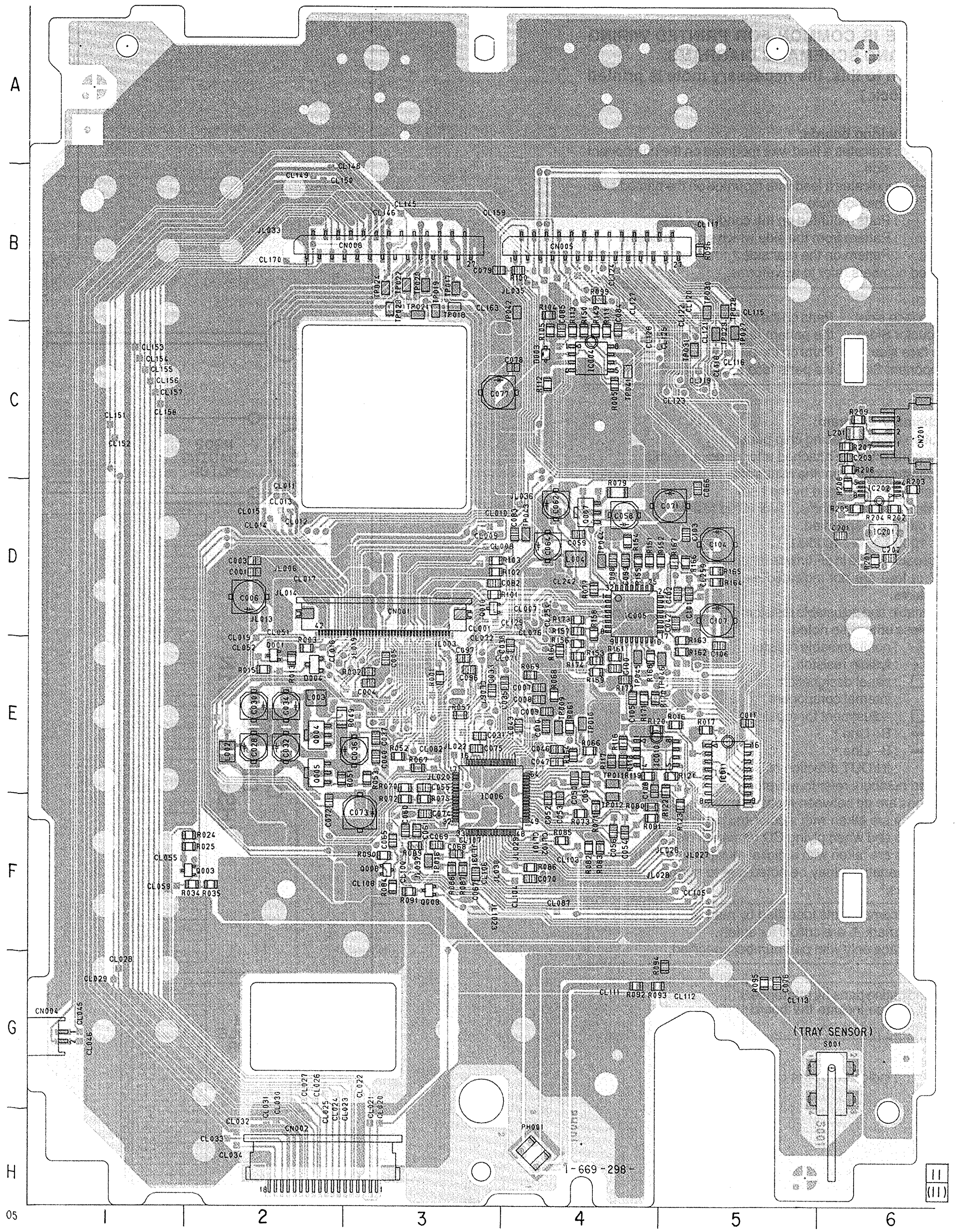

TK-47 (RF, SERVO) SCHEMATIC DIAGRAM

– Ref. No.: TK-47 board; 3,000 series –

• Waveforms

❶ IC006 ⑮ – ⑲ (DVD play)

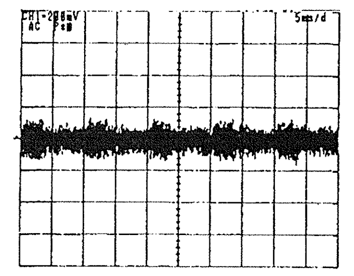

270 mVp-p (V)

❹ IC005 ⑬ (CD play)

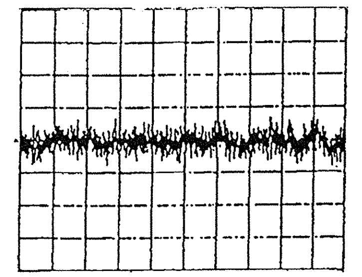

500 mV/DIV 1 ms/DIV

❷ IC006 ⑭ – ⑱ (DVD play)

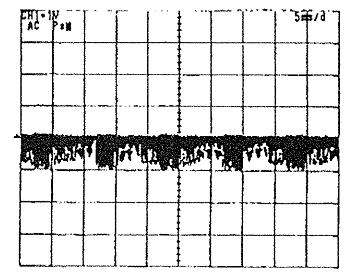

1.2 Vp-p (V)

❺ IC005 ⑮ (CD play)

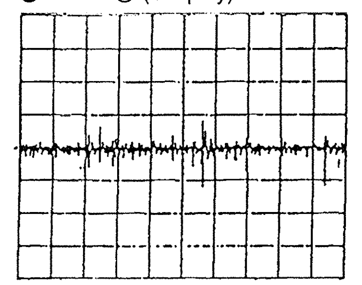

500 mV/DIV 10 ms/DIV

❸ IC006 ⑲ – ⑳ (DVD play)

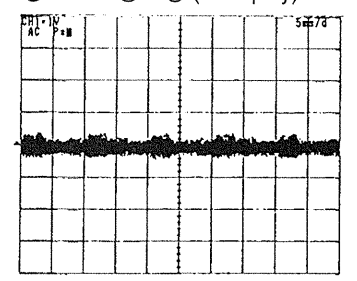

800 mVp-p (V)

❻ IC005 ⑯ (CD play)

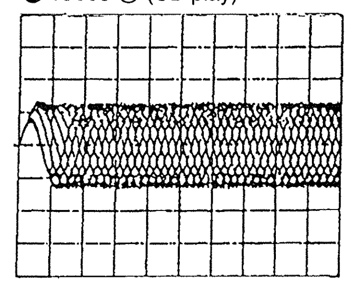

500 mV/DIV 1 μs/DIV

Note: The components identified by mark ⚠ or dotted line with mark ⚠ are critical for safety. Replace only with part number specified.

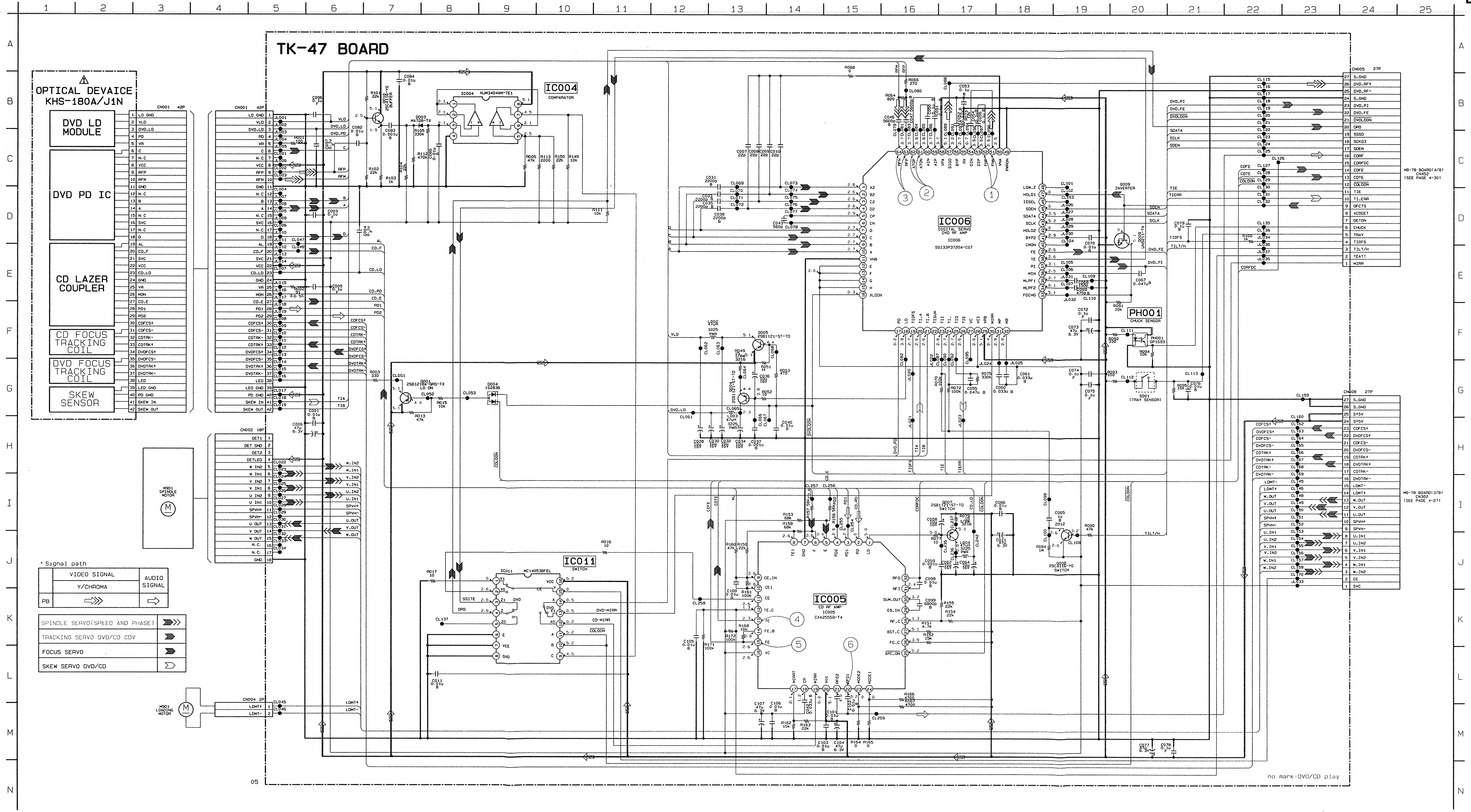

Note: The components identified by mark ⚠ or dotted line with mark ⚠ are critical for safety. Replace only with part number specified.

MB-78 (SIGNAL PROCESS), FG-43 (SLED) PRINTED WIRING BOARDS

– Ref. No.: MB-78 board; 1,000 series, FG-43 board; 3,000 series –

There are few cases that the part isn't mounted in this model is printed on this diagram.

FG-43 BOARD

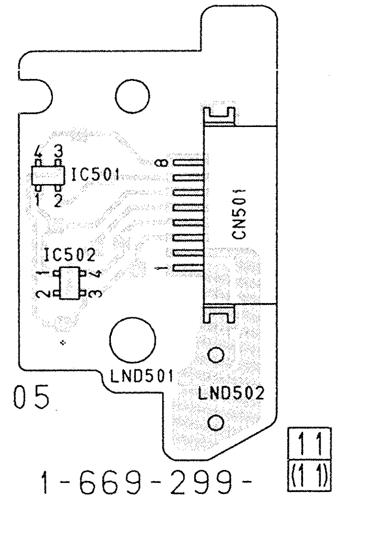

MB-78 BOARD (SIDE A)

CN001	H-1
CN002	G-1
CN251	B-11
CN303	A-7
CN361	C-11
CN451	B-4
CN601	H-11
CN801	I-8
D102	A-4
D801	I-10
IC203	E-2
IC205	E-9
IC206	E-9
IC251	C-2
IC252	B-3
IC301	B-8
IC303	B-9
IC455	D-5
IC501	B-7
IC506	E-6
IC508	B-7
IC603	I-9
IC604	G-10
IC803	I-6
IC804	G-8
IC805	G-5
IC806	B-5
Q371	E-5
Q372	D-5
Q501	B-7

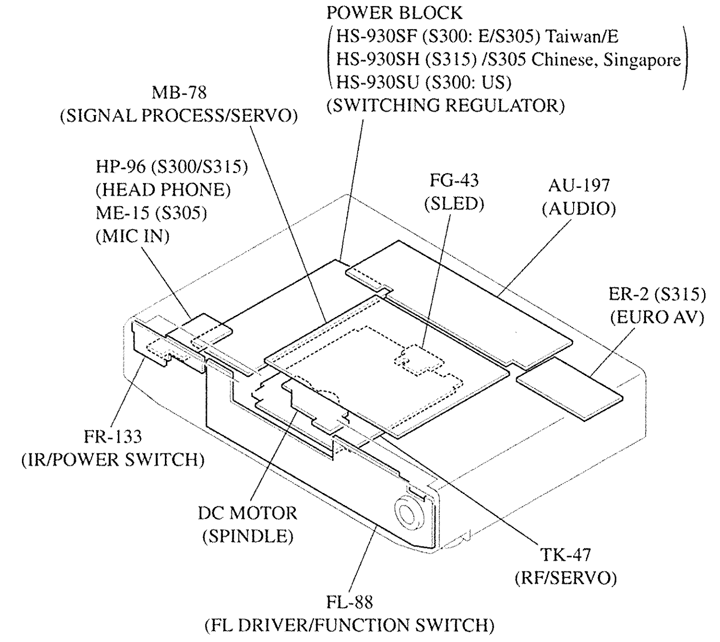

MB-78 BOARD (SIDE A)

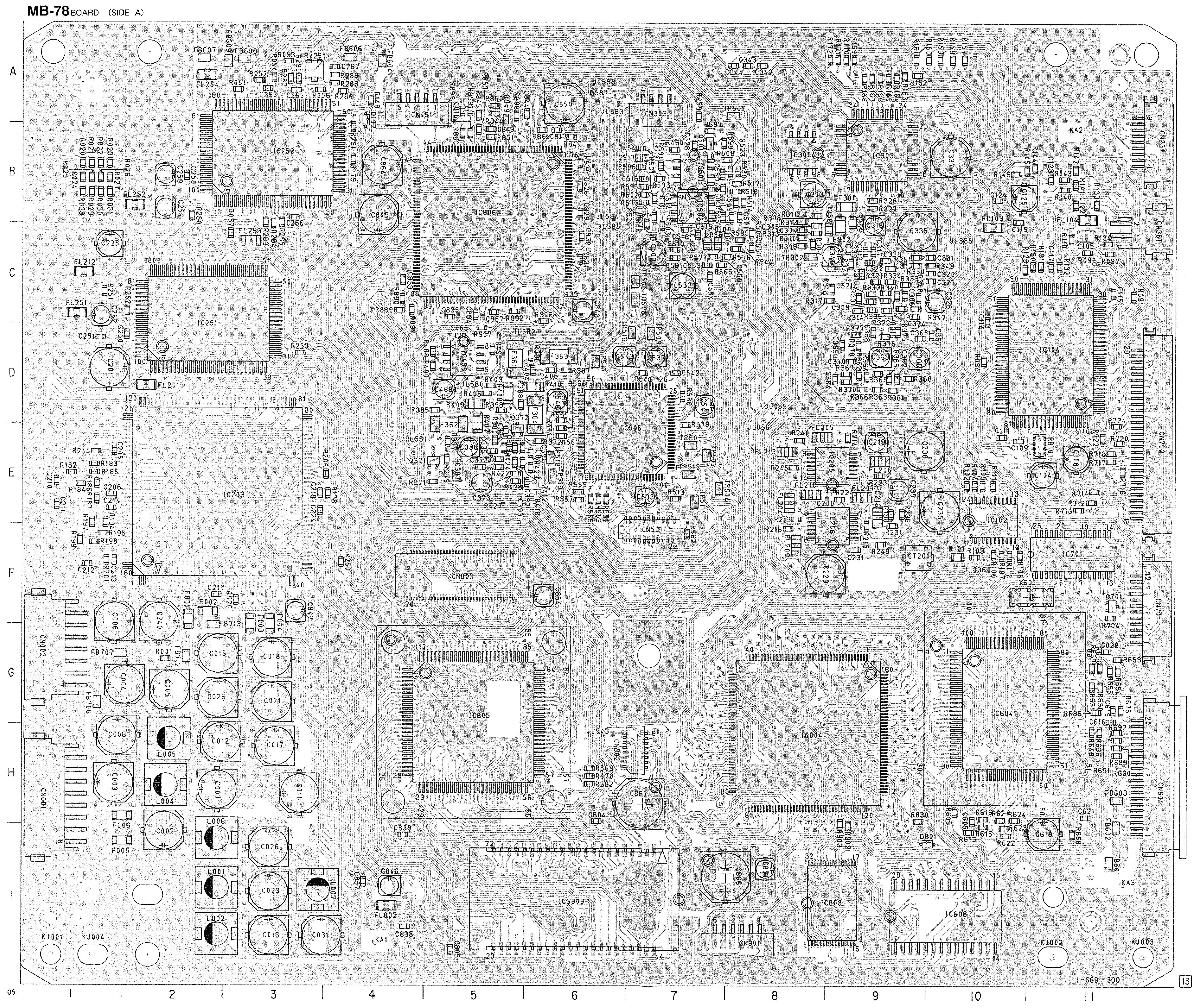

MB-78 BOARD (SIDE B)

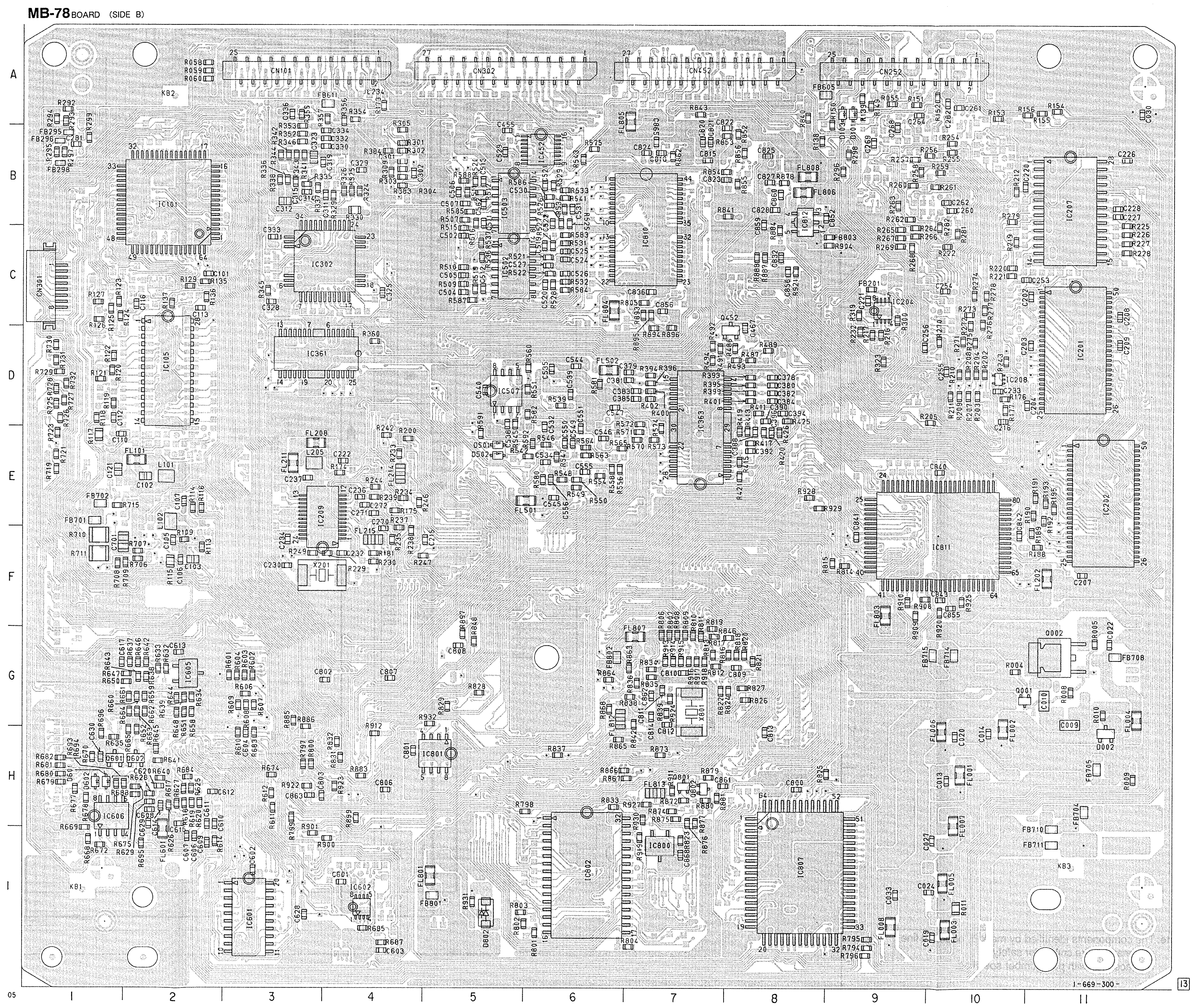

MB-78 BOARD (SIDE B)

CN101	A-3
CN252	A-9
CN301	C-1
CN302	A-5
CN452	A-7
D002	G-11
D101	A-9
D103	A-9
D502	E-5
D601	H-1
D602	H-1
D802	I-5
IC201	D-11
IC202	E-11
IC204	B-9
IC207	B-11
IC208	D-10
IC209	E-3
IC302	C-3
IC361	D-3
IC363	D-7
IC452	B-6
IC502	C-5
IC503	B-5
IC507	D-5
IC601	I-3
IC602	I-4
IC605	G-2
IC606	H-1
IC801	H-5
IC802	I-6
IC807	I-8
IC810	B-7
IC811	F-10
IC812	B-8
Q001	G-11
Q002	G-11
Q452	C-8
Q601	H-1
Q602	H-2

MB-78 (AV DECODER) SCHEMATIC DIAGRAM

– Ref. No.: MB-78 board; 1,000 series –

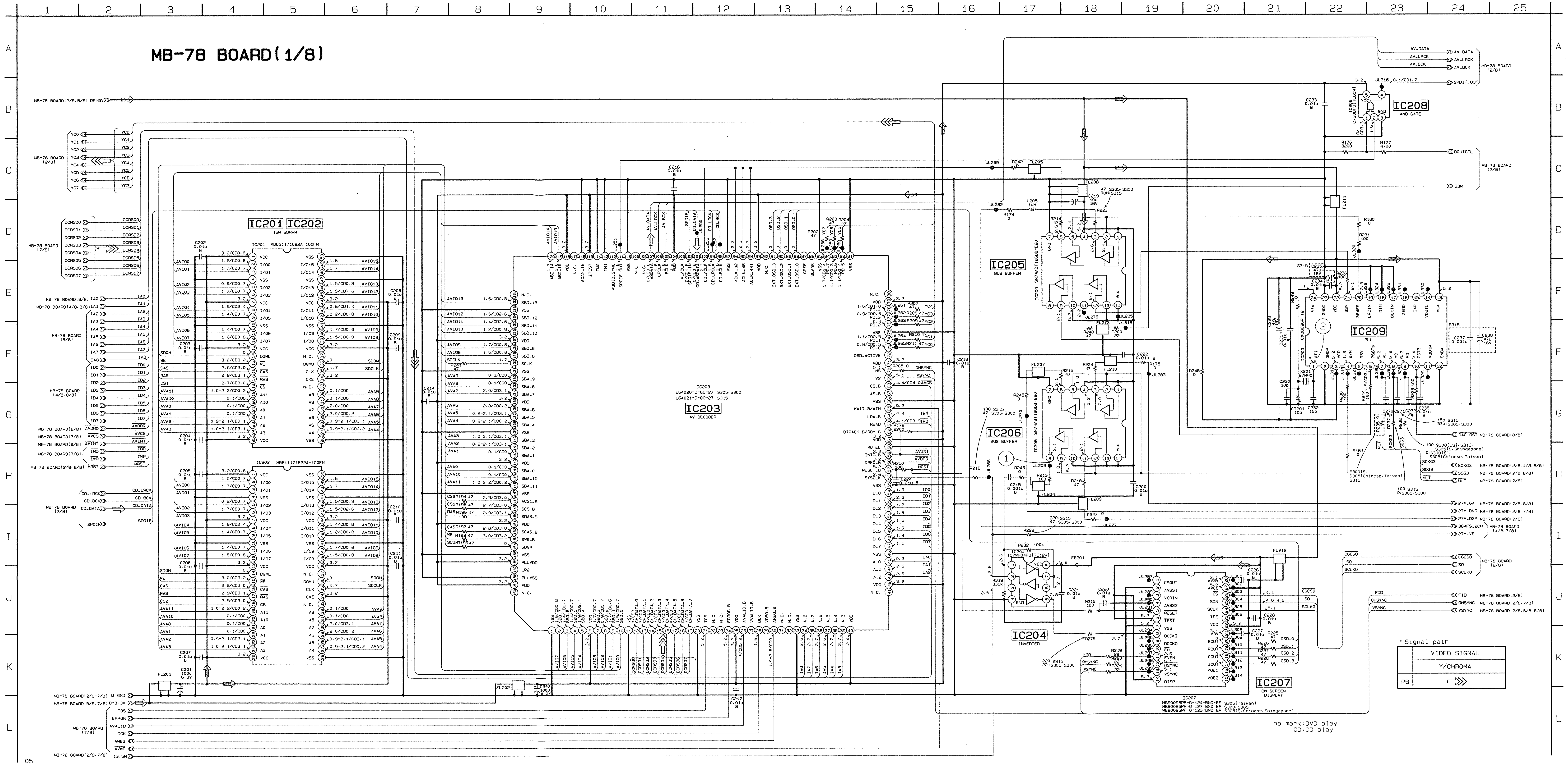

• Waveforms

1 IC206 ⑧

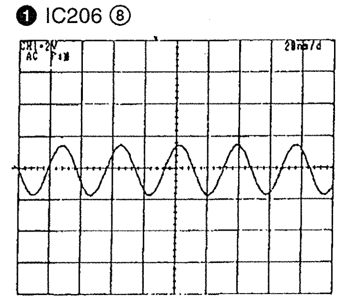

3.28 Vp-p 27 MHz

2 IC209 ①

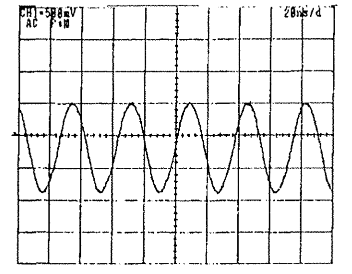

1.4 Vp-p 27 MHz

AV DECODER
MB-78 (1/8)

MB-78 (VIDEO ENCODER) SCHEMATIC DIAGRAM • See page 4-12 to 4-16 for printed wiring board.

– Ref. No.: MB-78 board; 1,000 series –

• **Waveforms**

❶ IC252 ⑭

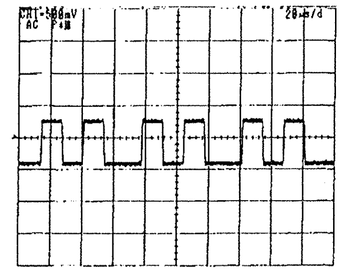

0.7 Vp-p

❷ IC252 ⑫

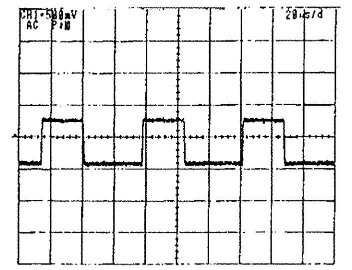

0.7 Vp-p

❸ IC252 ⑯

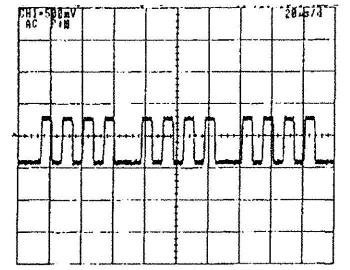

0.7 Vp-p

❹ IC252 ⑭

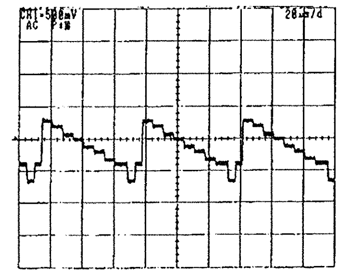

1.0 Vp-p

❺ IC252 ⑱

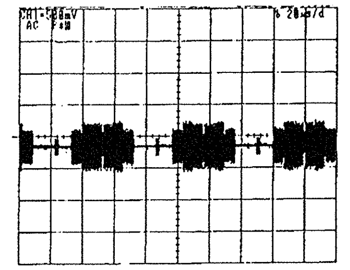

0.7 Vp-p

❻ IC252 ⑯

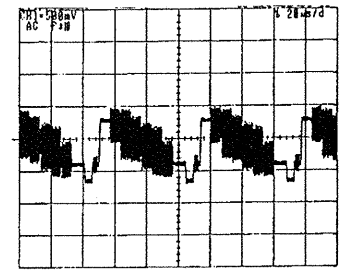

1.1 Vp-p

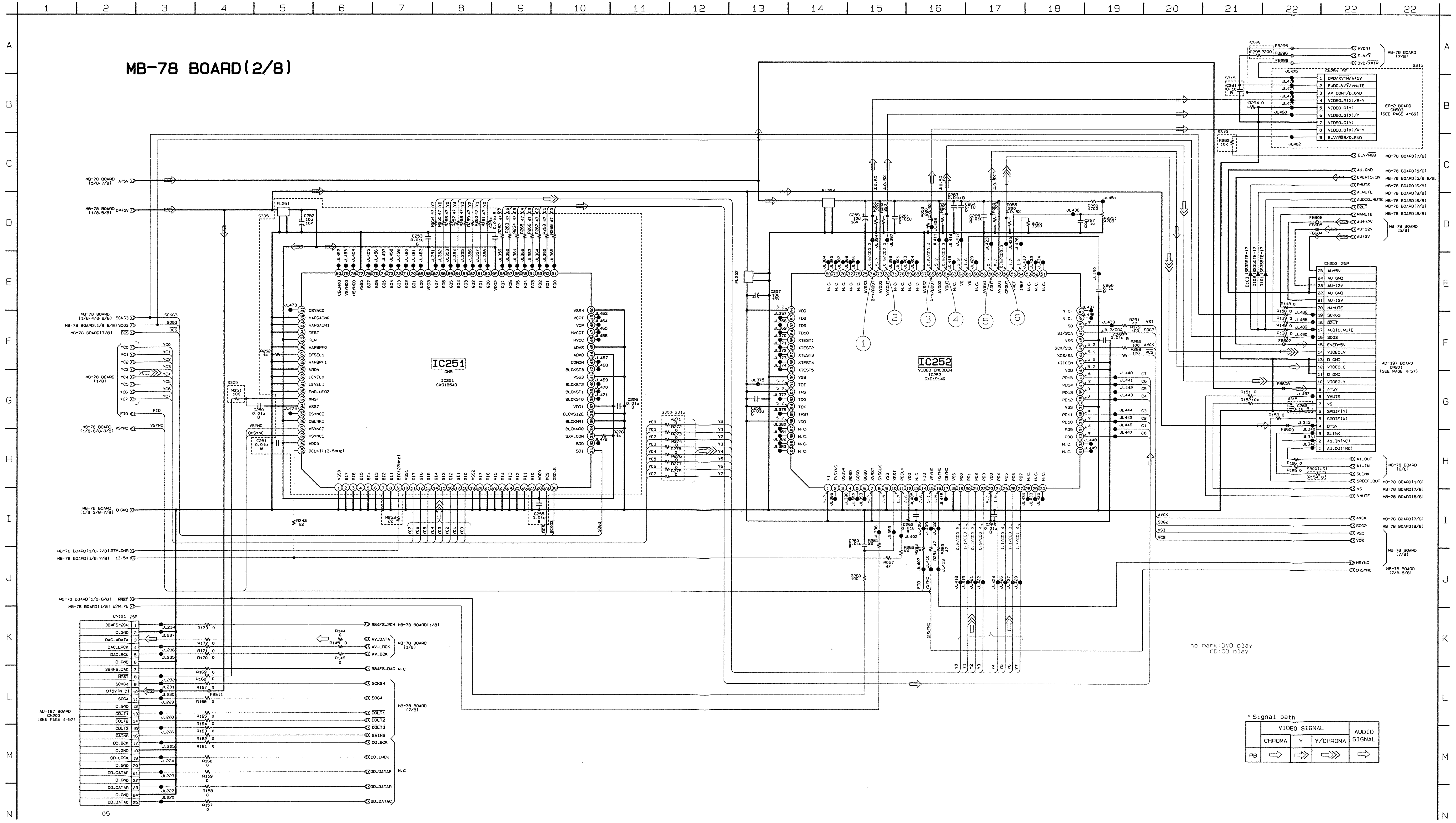

VIDEO ENCODER
MB-78 (2/8)

MB-78 (DRIVE), FG-43 (SLED) SCHEMATIC DIAGRAMS • See page 4-12 to 4-16 for printed wiring board.

– Ref. No.: MB-78 board; 1,000 series, FG-43 board; 3,000 series –

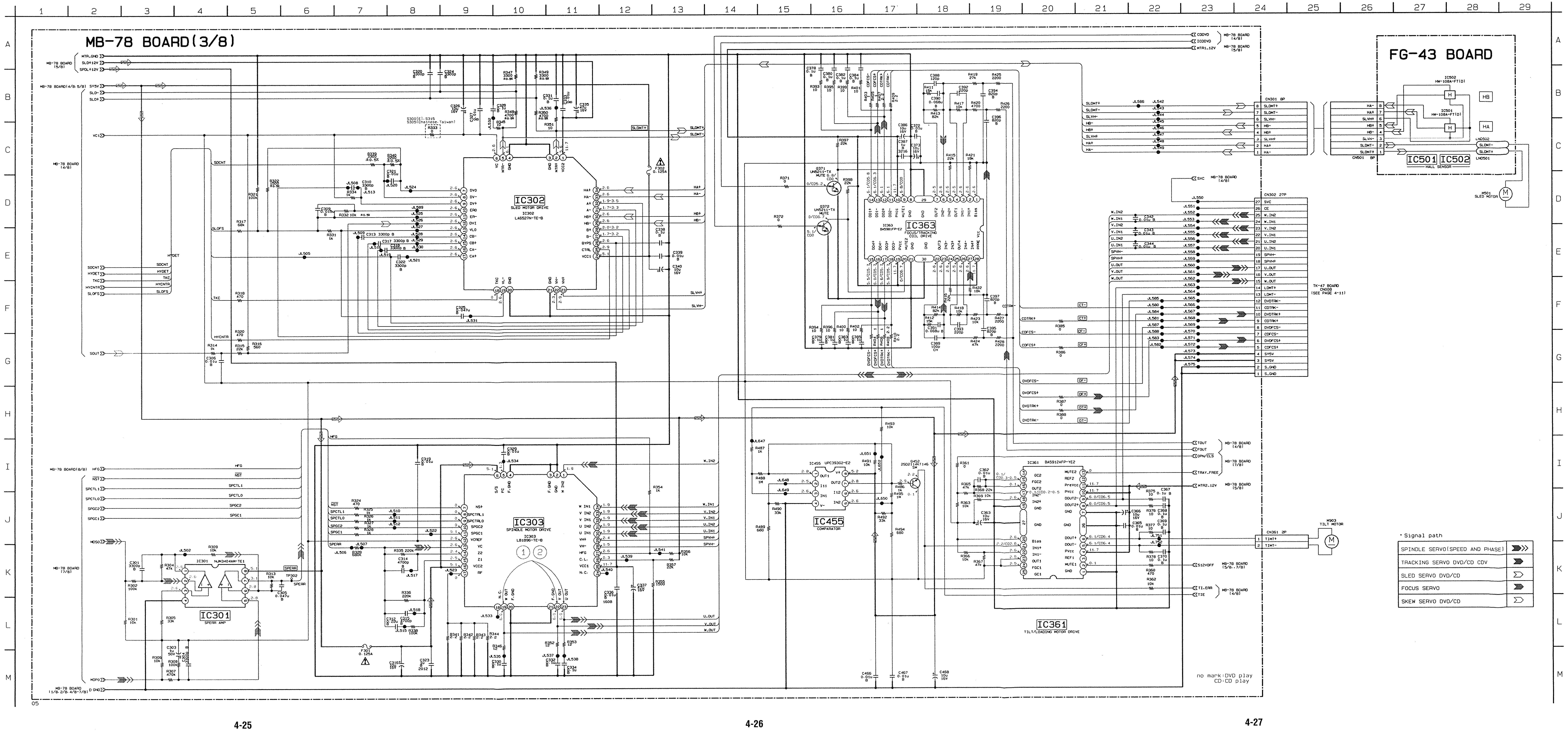

• Signal path

SPINDLE SERVO(SPEED AND PHASE)	
TRACKING SERVO DVD/CD CDV	
SLED SERVO DVD/CD	
FOCUS SERVO	
SKEW SERVO DVD/CD	

• Waveforms

❶ IC303 ⑲, ㉒, ㉓ (DVD play)

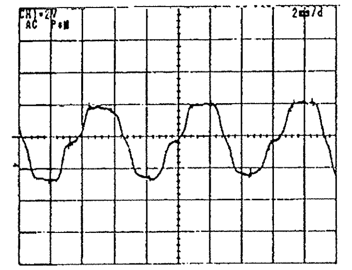

5.2 Vp-p 160 Hz

❷ IC303 ⑲, ㉒, ㉓ (CD play)

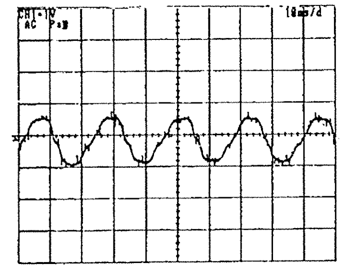

1.84 Vp-p 45 Hz

Note: The components identified by mark ⚠ or dotted line with mark ⚠ are critical for safety.
Replace only with part number specified.

MB-78 (DSP) SCHEMATIC DIAGRAM • See page 4-12 to 4-16 for printed wiring board.

– Ref. No.: MB-78 board; 1,000 series –

• **Waveform**

1 IC506 66

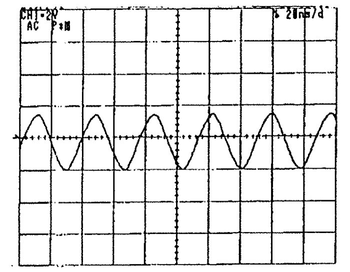

3.6 Vp-p 27 MHz

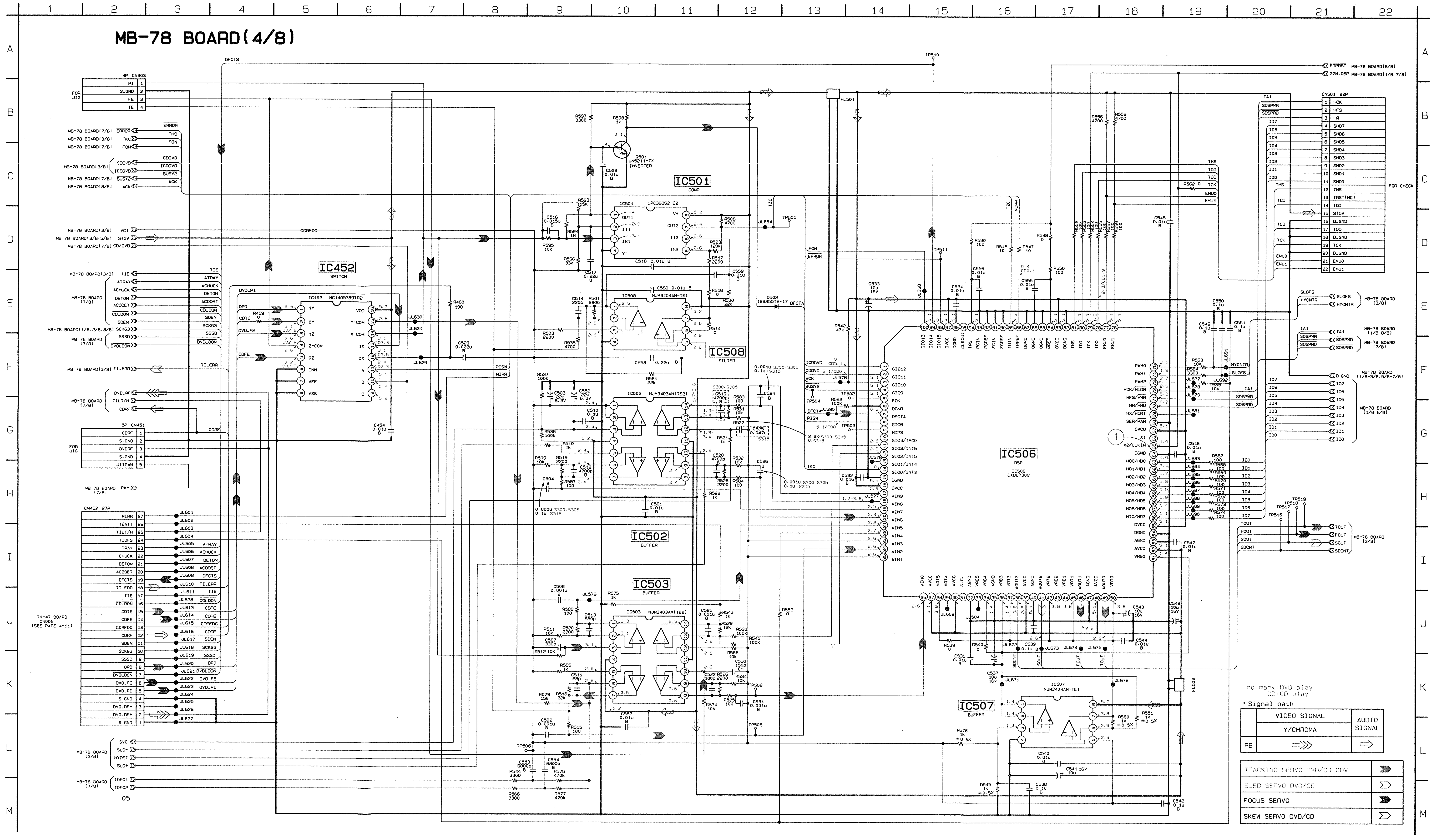

MB-78 (BIAS) SCHEMATIC DIAGRAM • See page 4-12 to 4-16 for printed wiring board.

– Ref. No.: MB-78 board; 1,000 series –

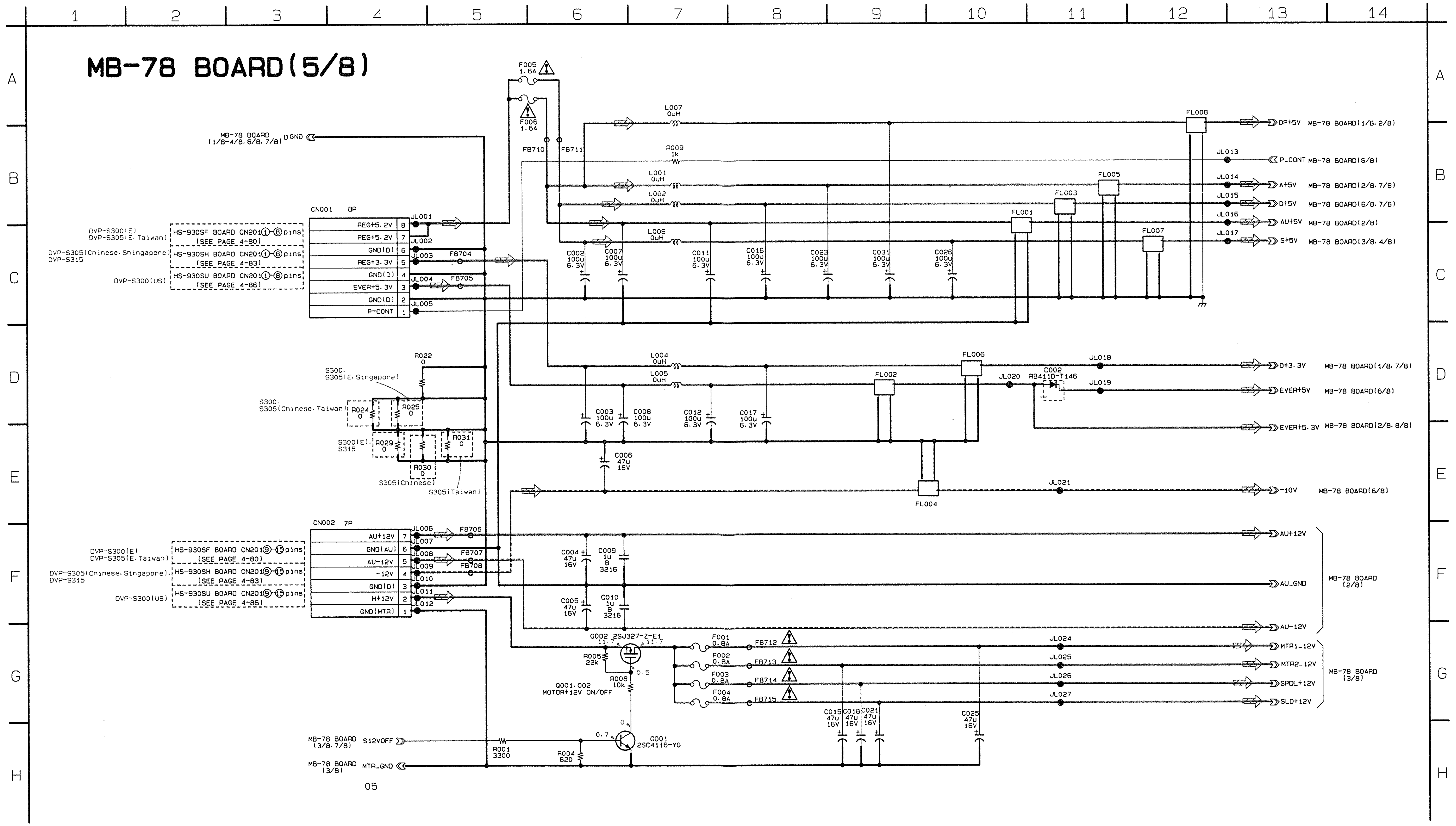

Note: The components identified by mark ⚠ or dotted line with mark ⚠ are critical for safety.
Replace only with part number specified.

MB-78 (IF µ-COM) SCHEMATIC DIAGRAM • **See page 4-12 to 4-16 for printed wiring board.**

– Ref. No.: MB-78 board; 1,000 series –

• **Waveform**

❶ IC604

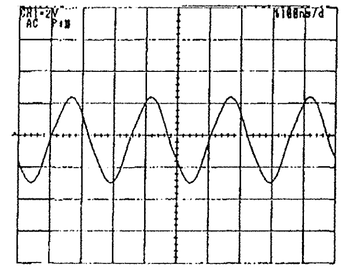

5.6 Vp-p 4 MHz

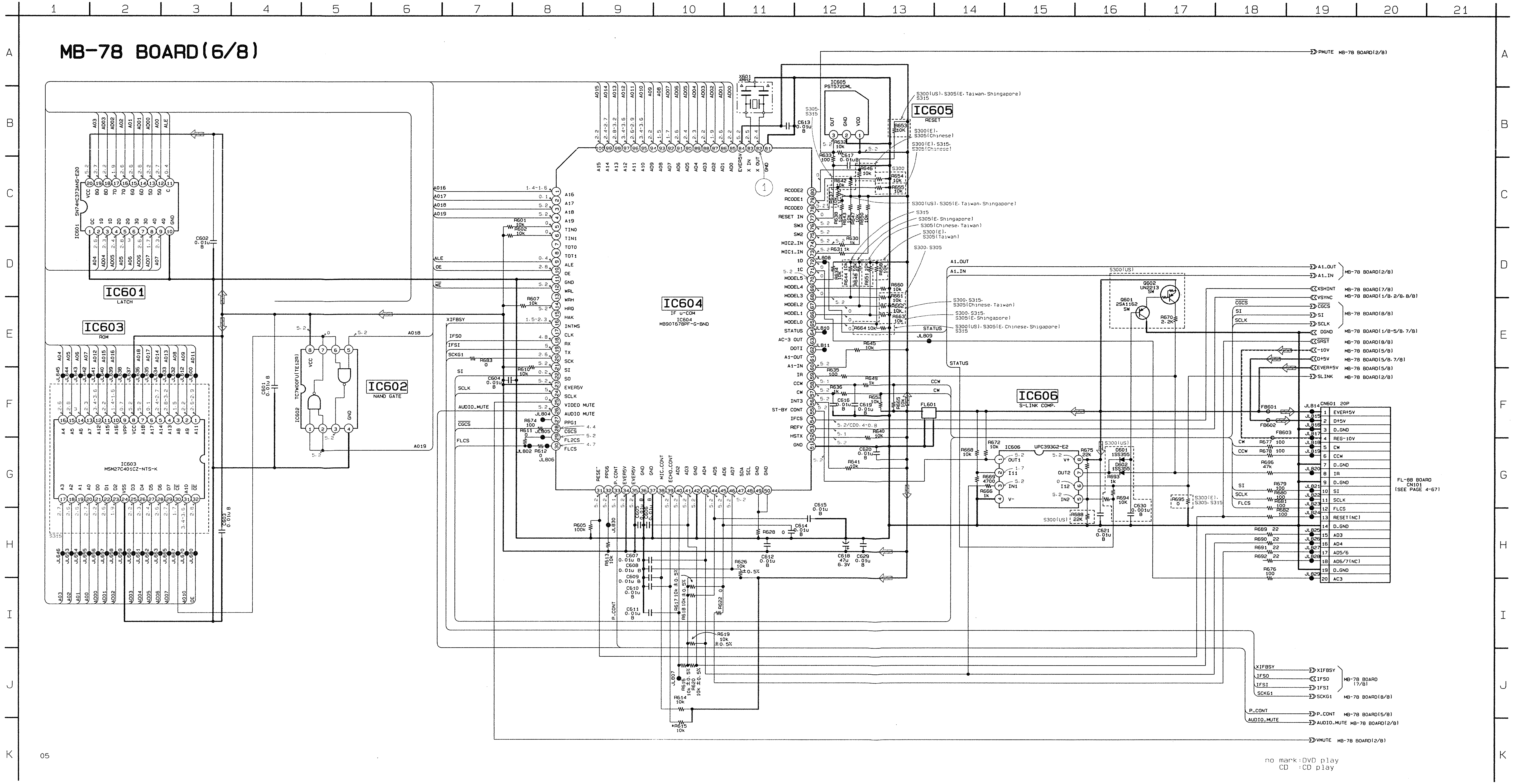

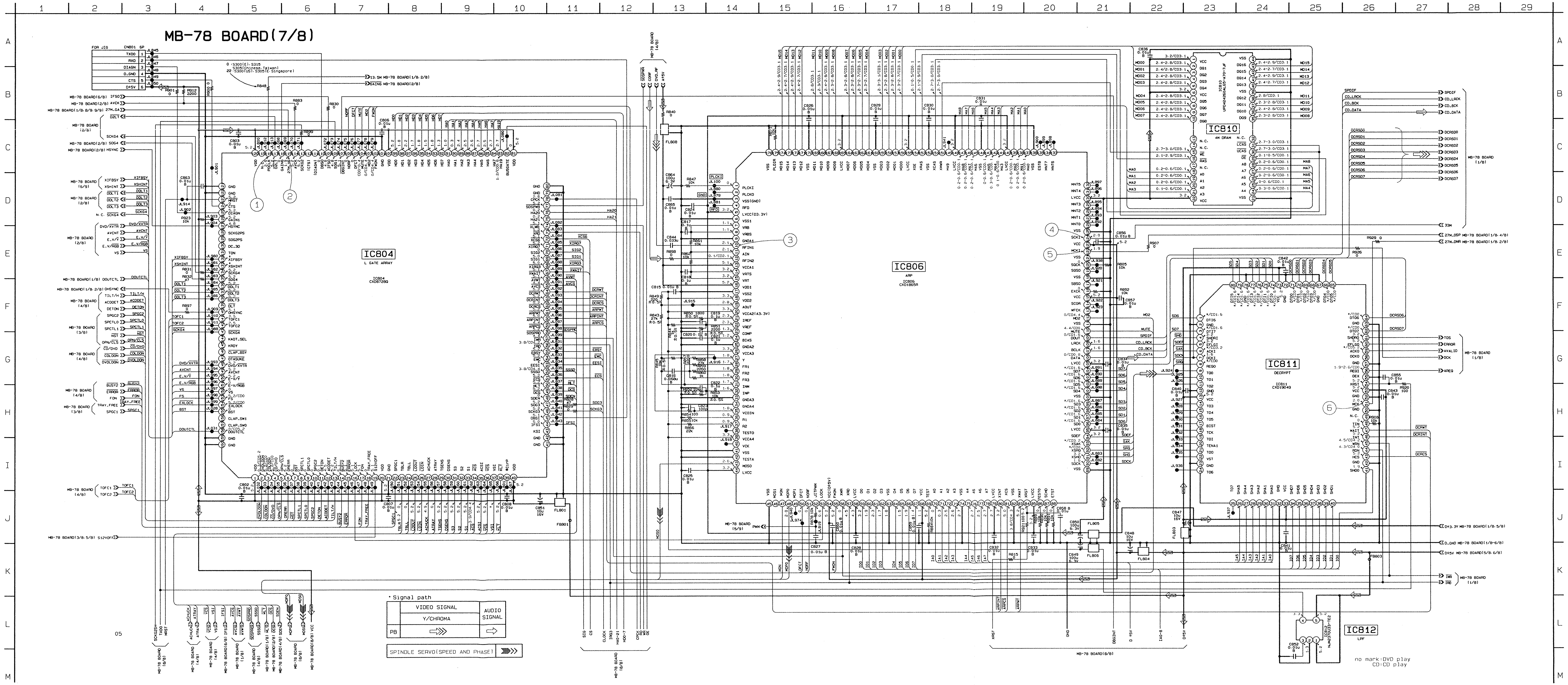
MB-78 BOARD(7/8)
IC804
L GATE ARRAY
IC806
ARP
IC810
IC811
DECRYPT
IC812
Signal path
VIDEO SIGNAL
Y/CHROMA
AUDIO SIGNAL
PB
SPINDLE SERVO(SPEED AND PHASE)
no mark:DVD play
CD:CD play

• Waveforms

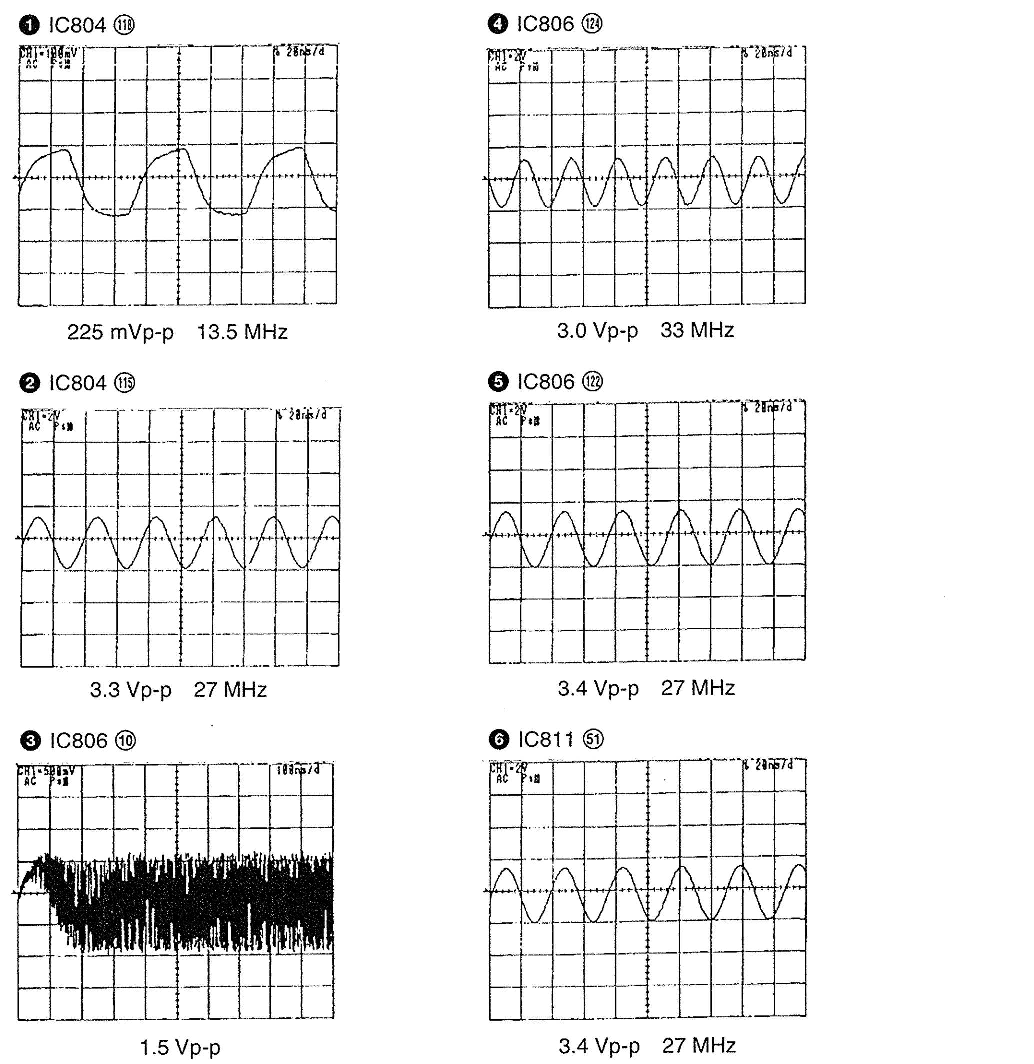
1 IC804 ⑲
225 mVp-p 13.5 MHz
2 IC804 ⑲
3.3 Vp-p 27 MHz
3 IC806 ⑲
1.5 Vp-p
4 IC806 ⑲
3.0 Vp-p 33 MHz
5 IC806 ⑲
3.4 Vp-p 27 MHz
6 IC811 ⑪
3.4 Vp-p 27 MHz

MB-78 (SYSTEM μ-COM, S GATE ARRAY) SCHEMATIC DIAGRAM • See page 4-12 to 4-16 for printed wiring board.

– Ref. No.: MB-78 board; 1,000 series –

• Waveform

❶ IC805 ⑳

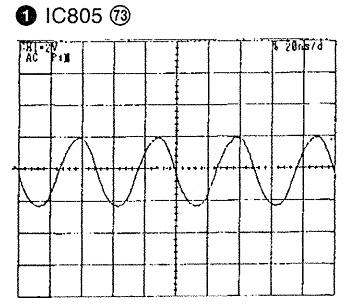

4.4 Vp-p 20 MHz

ME-15 (MIC IN), HP-96 (HEAD PHONE) PRINTED WIRING BOARDS AND SCHEMATIC DIAGRAMS

– Ref. No.: ME-15 board; 2,000 series (DVP-S305), HP-96 board; 4,000 series (DVP-S300/S315) –

There are few cases that the part isn't mounted in this model is printed on this diagram.

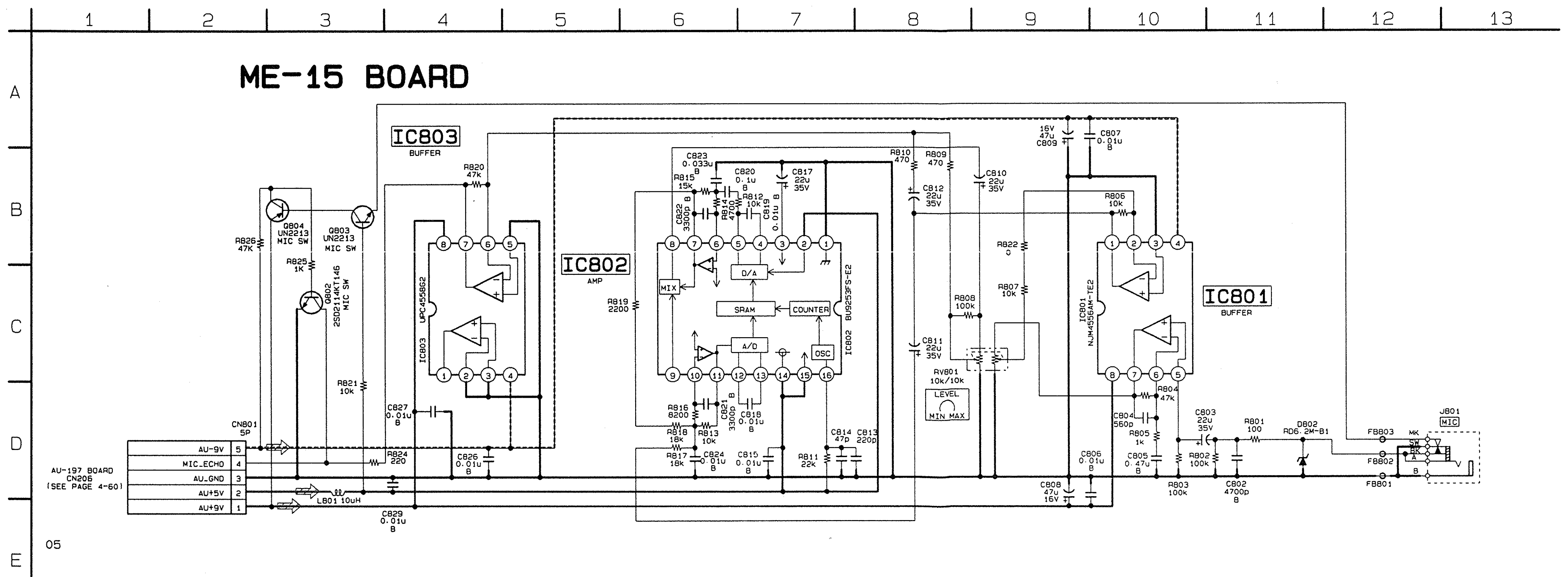

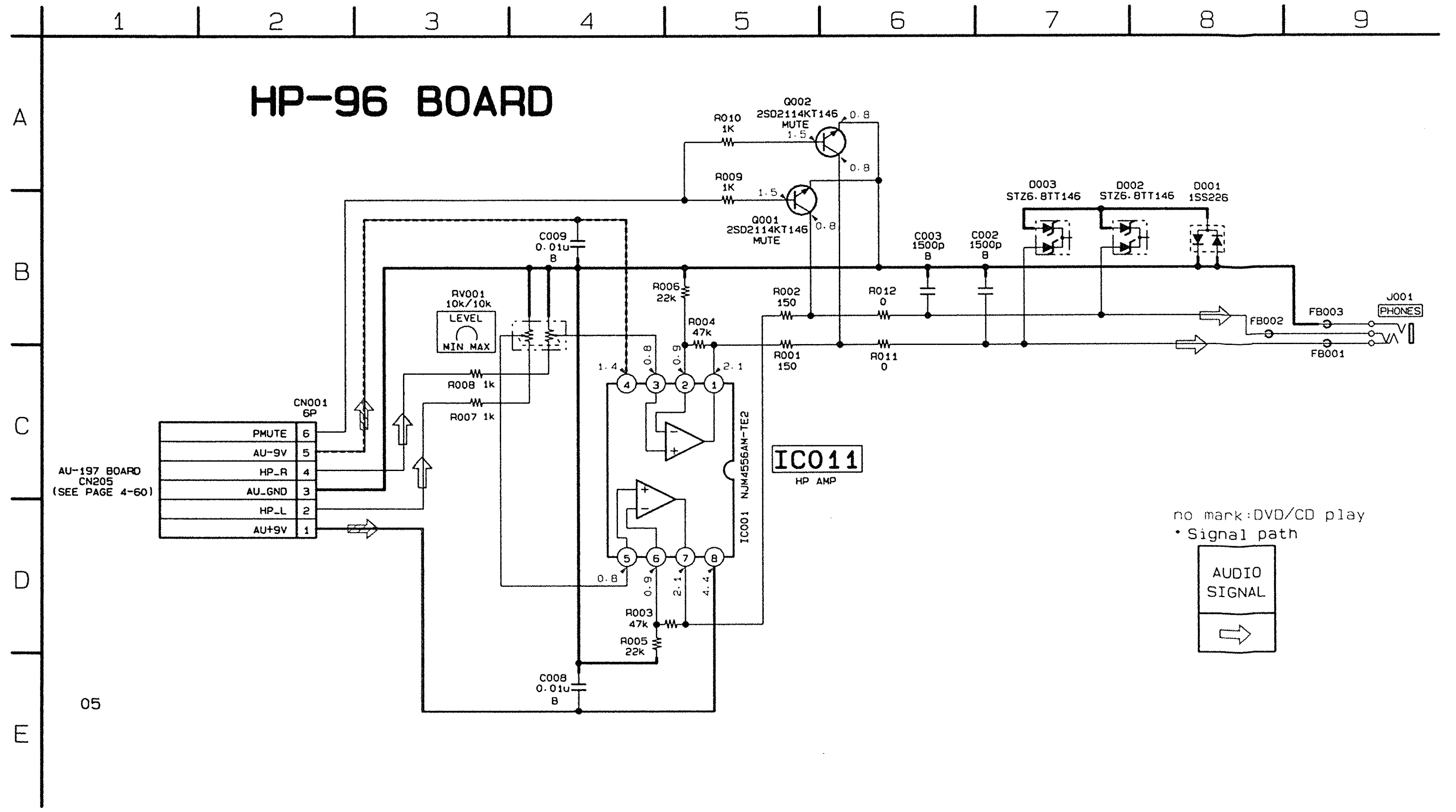

ME-15 BOARD (SIDE A)

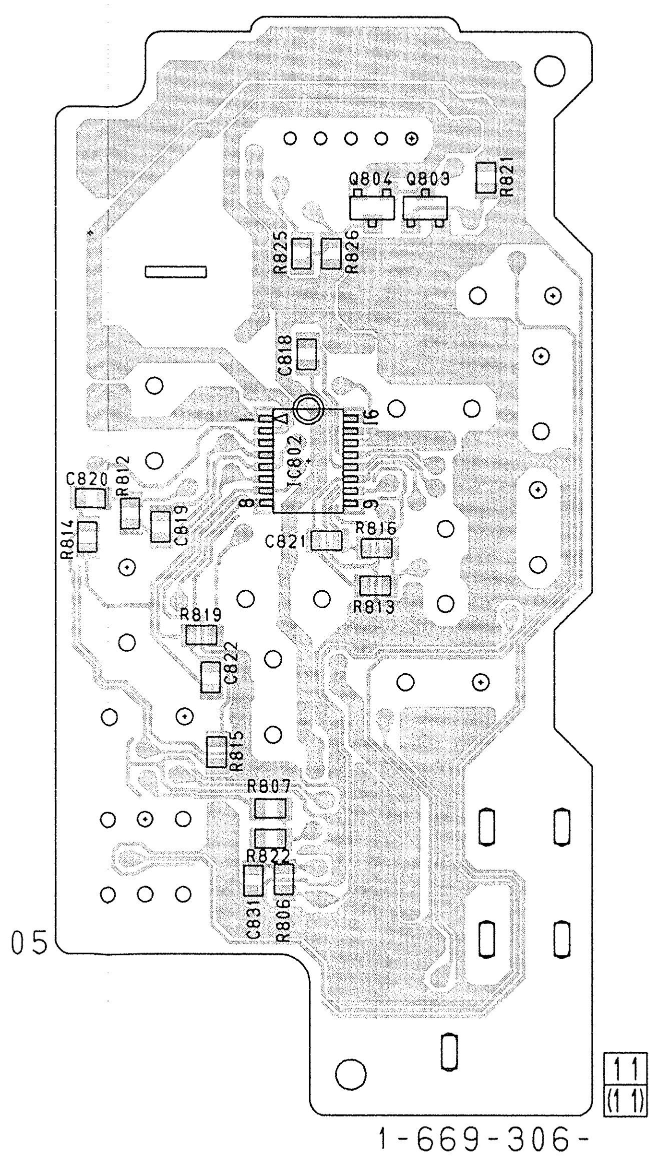

ME-15 BOARD (SIDE B)

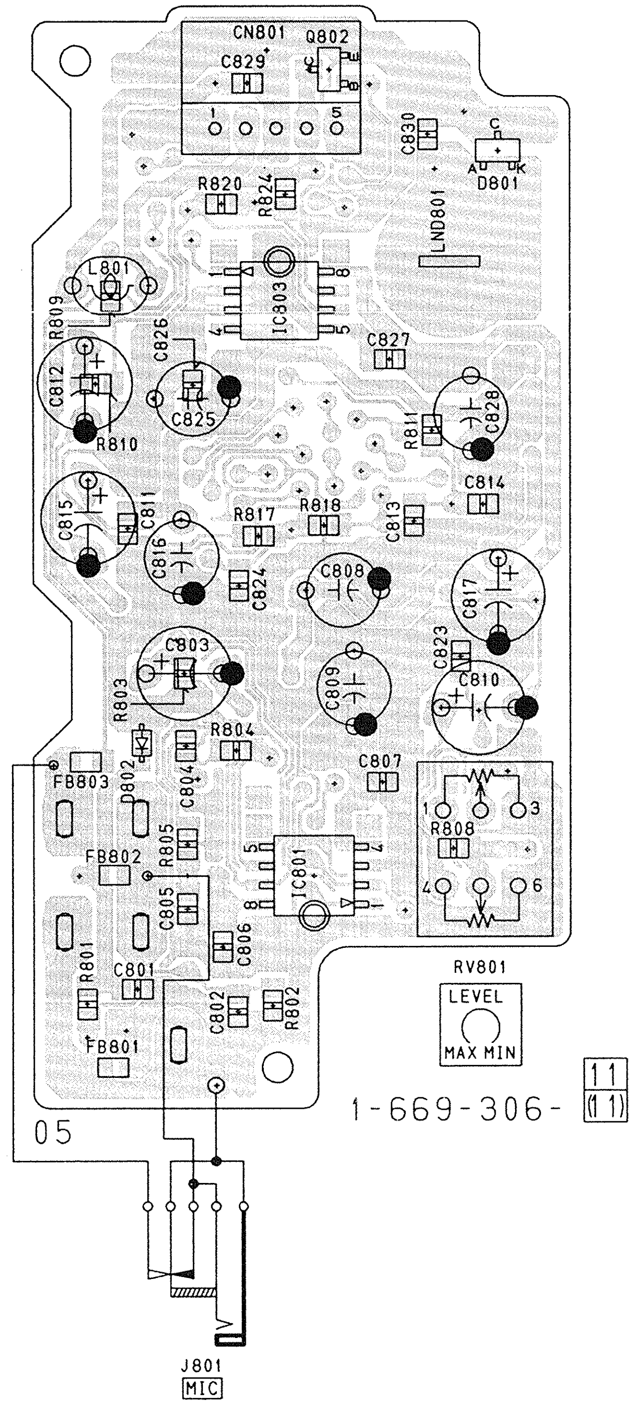

HP-96 BOARD (SIDE A)

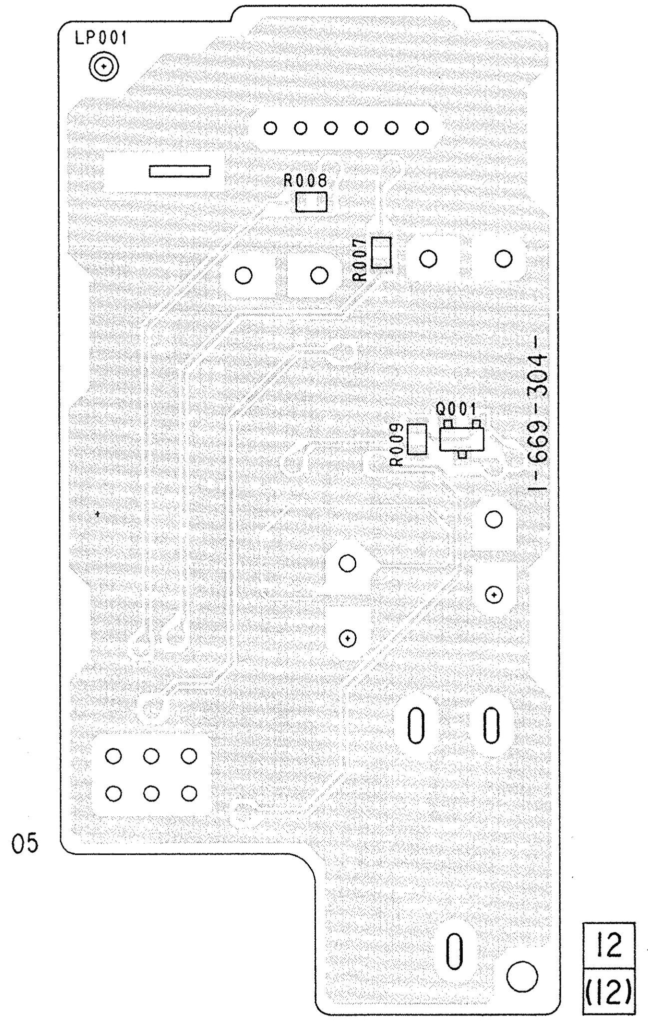

HP-96 BOARD (SIDE B)

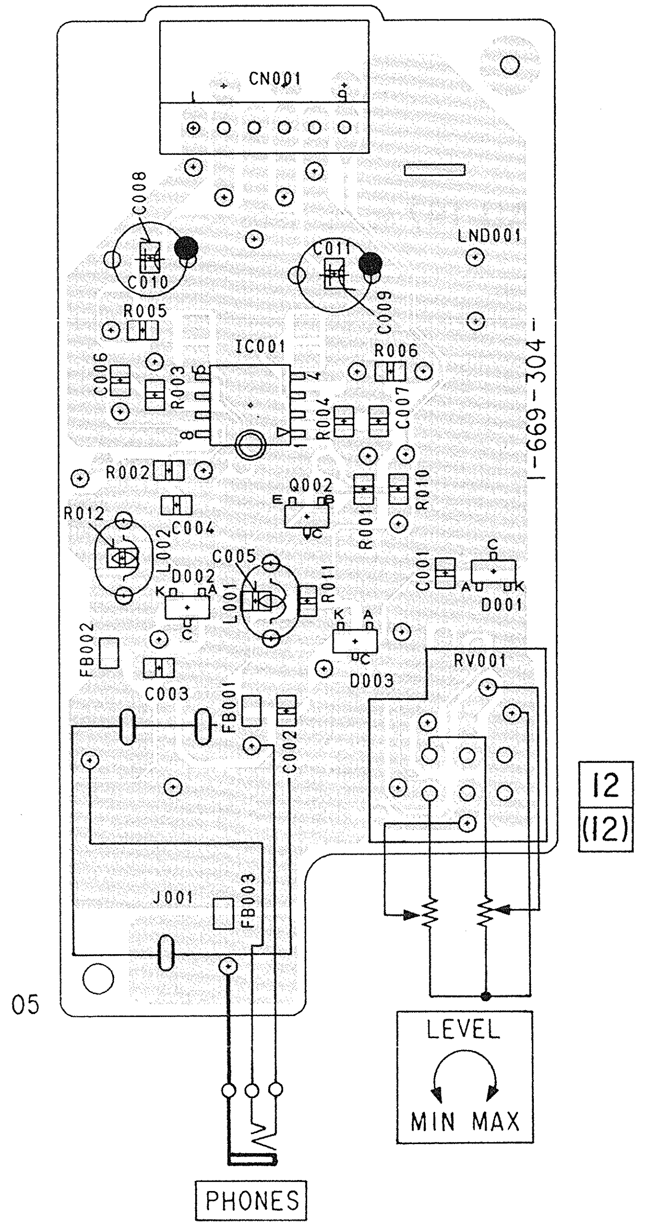

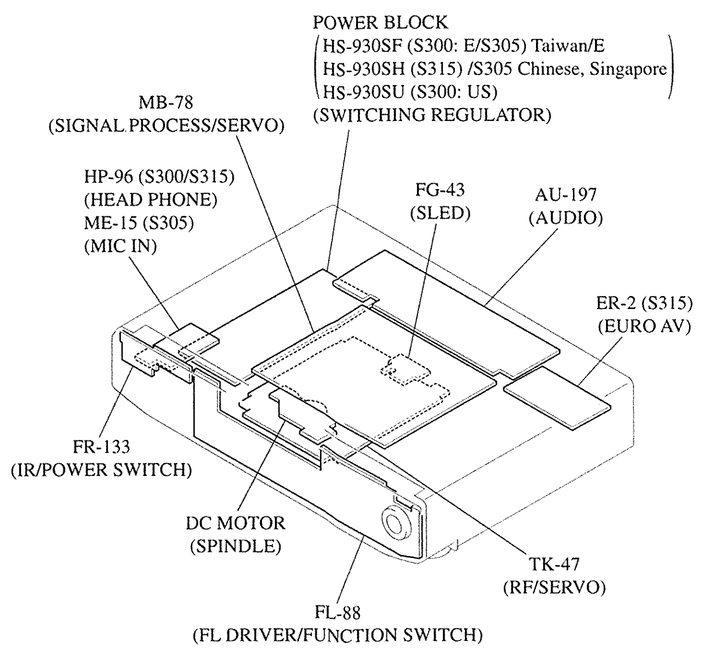

MIC IN, HEAD PHONE
ME-15, HP-96

AU-197 (AUDIO) PRINTED WIRING BOARD

– Ref. No.: AU-197 board; 2,000 series –

There are few cases that the part isn't mounted in this model is printed on this diagram.

AU-197 BOARD (SIDE A)

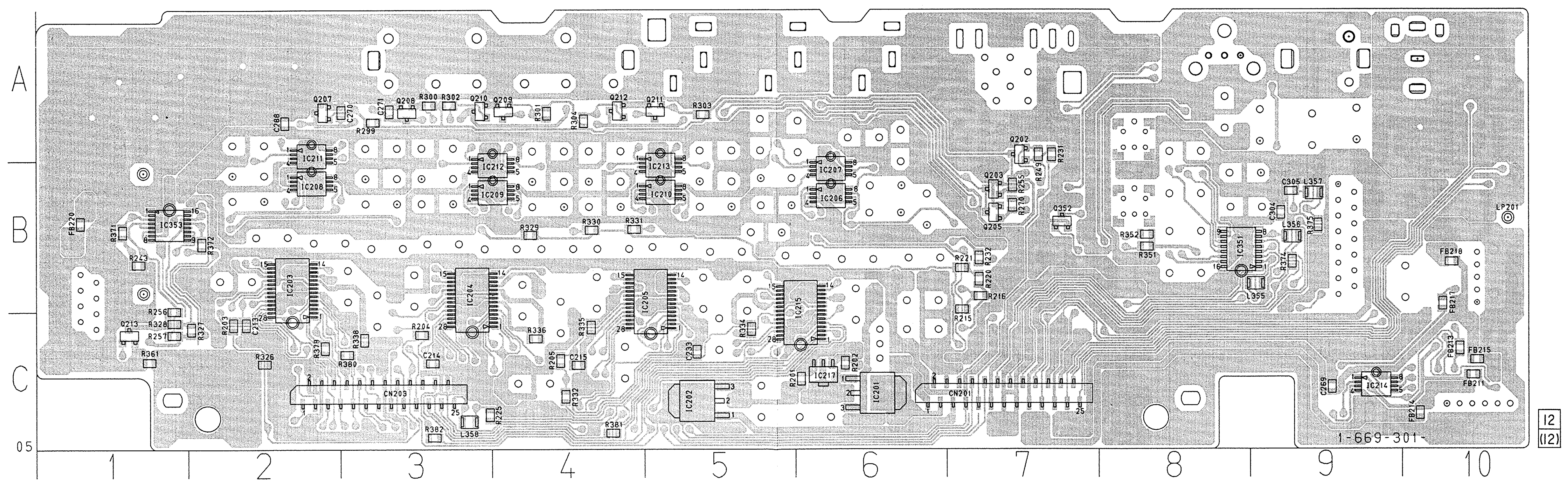

AU-197 BOARD (SIDE B)

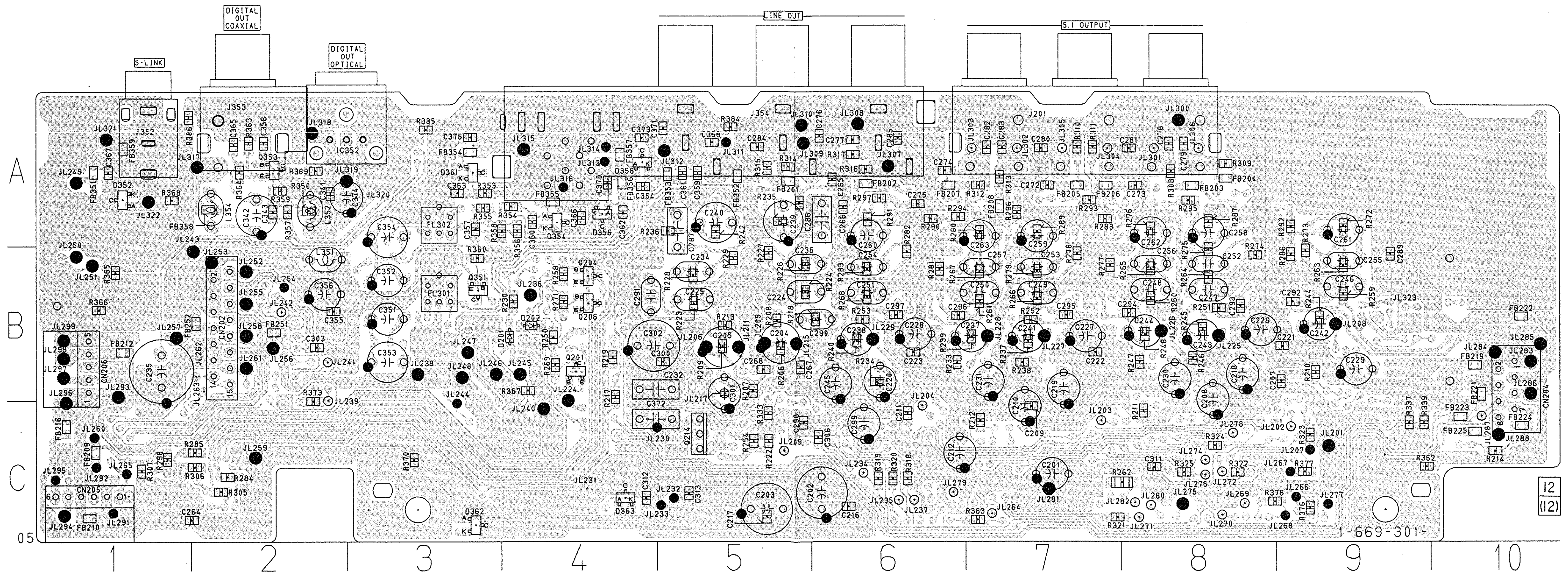

AU-197 BOARD (SIDE A)

CN201	C-7
CN203	C-3
IC201	C-6
IC202	C-5
IC206	B-6
IC207	A-6
IC214	C-9
IC215	B-5
IC217	C-5
IC351	B-8
Q202	A-7
Q205	B-7
Q352	B-7

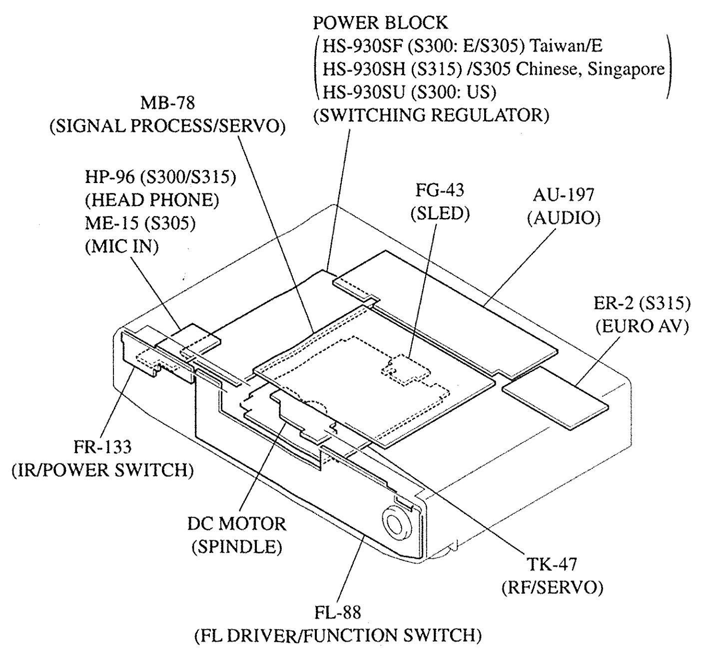

AU-197 BOARD (SIDE B)

CN202	B-2
CN205	C-1
CN206	B-1
D201	B-3
D202	B-4
D352	A-1
D354	A-4
D356	A-4
D358	A-4
D361	A-3
D362	C-3
D363	C-4
IC352	A-2
Q201	B-4
Q206	B-4
Q214	C-5
Q351	B-3
Q353	A-2

AU-197 (AUDIO) SCHEMATIC DIAGRAM

– Ref. No.: AU-197 board; 2,000 series –

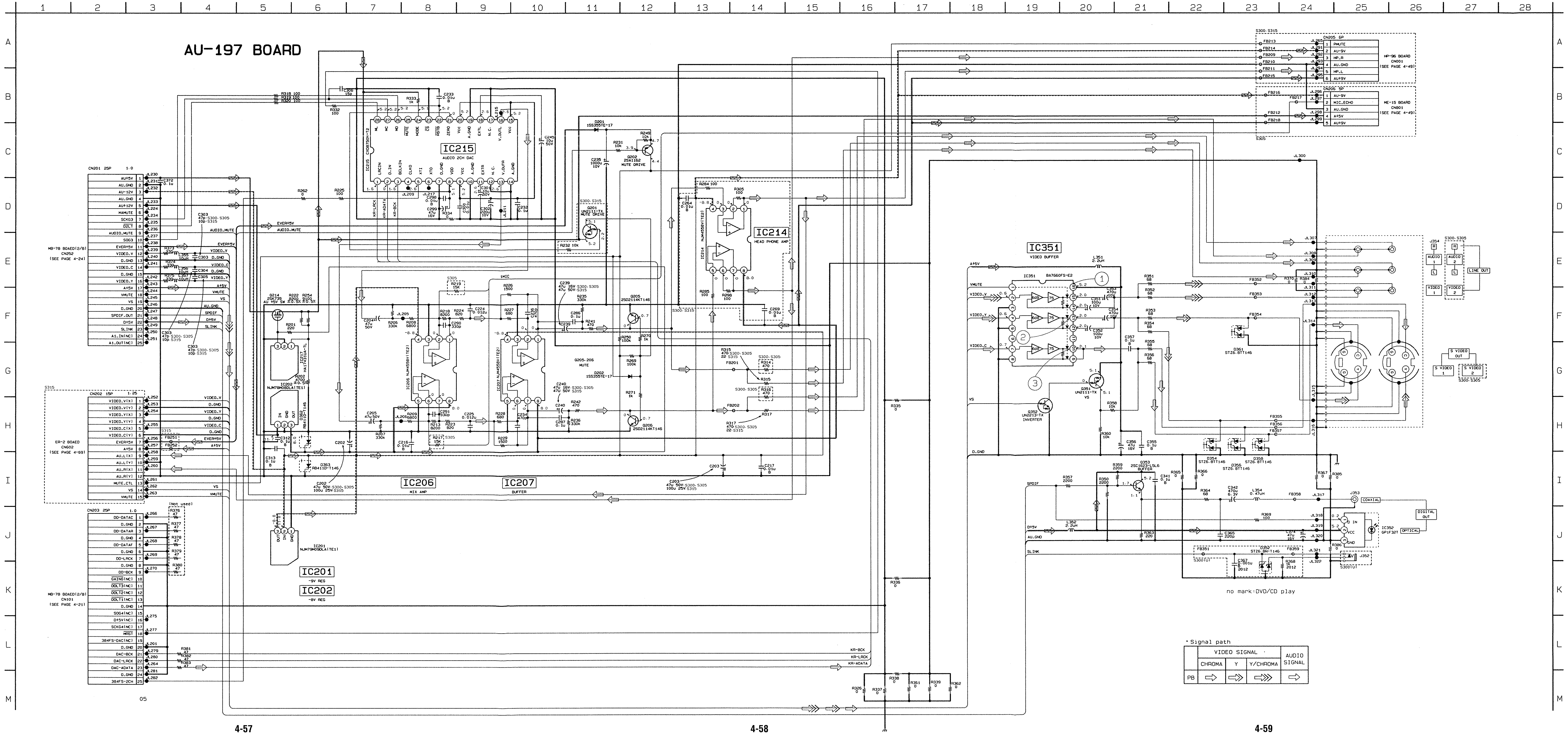

• Waveforms

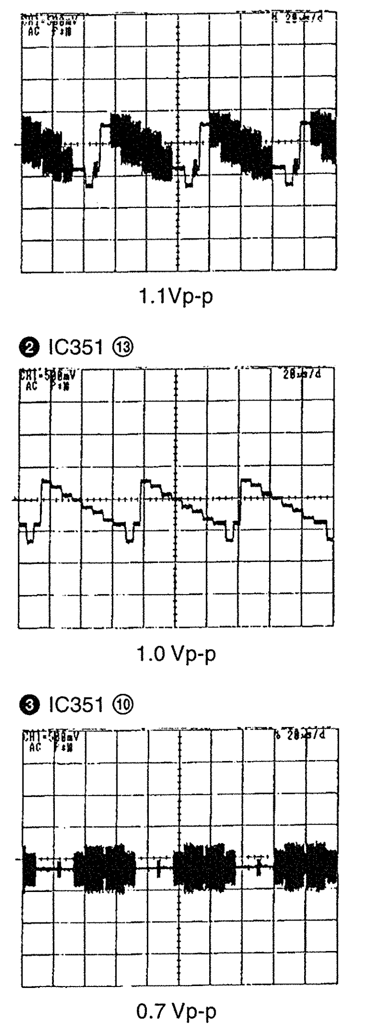

FL-88 (FL DRIVER, FUNCTION SWITCH), FR-133 (IR, POWER SWITCH) PRINTED WIRING BOARDS
– Ref. No.: FL-88 board; 2,000 series, FR-133 board; 2,000 series –

There are few cases that the part isn't mounted in this model is printed on this diagram.

FL-88 BOARD (SIDE A)

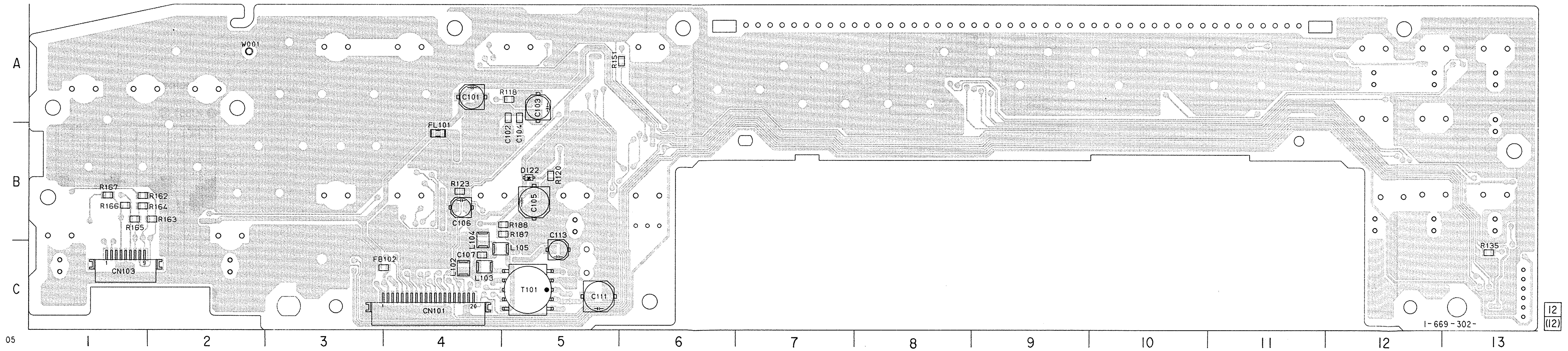

FL-88 BOARD (SIDE A)

CN101	C-4
CN103	C-1
D122	B-5

FR-133 BOARD

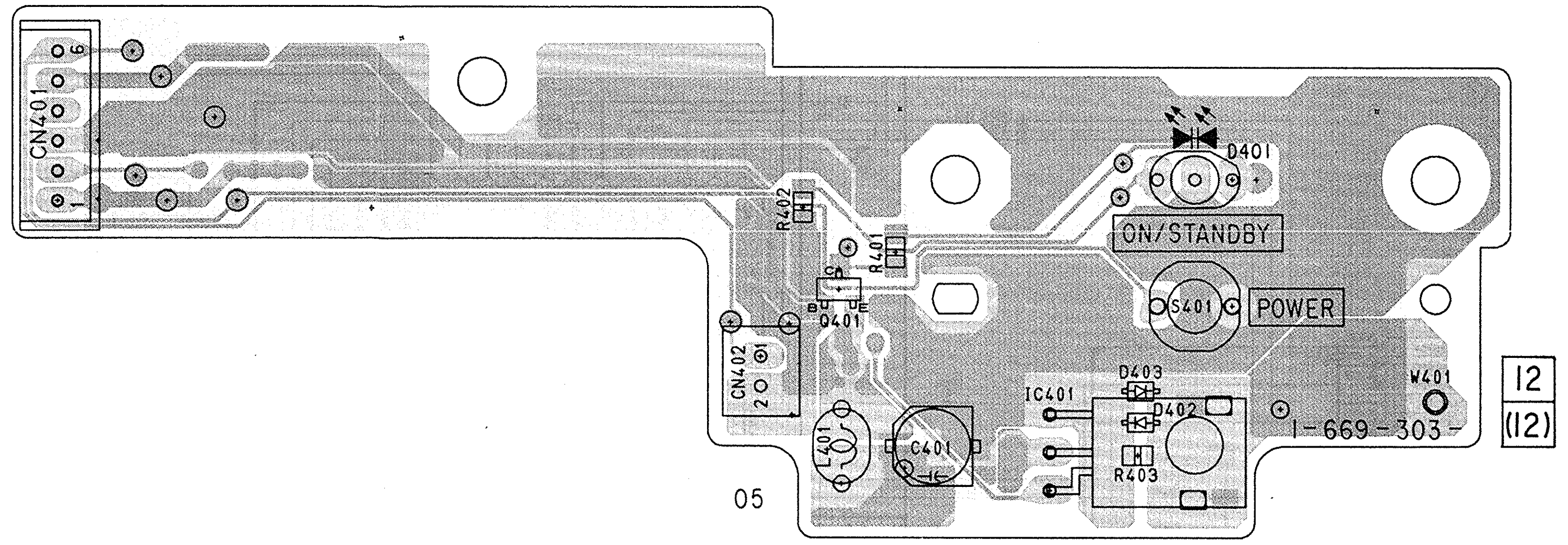

FL-88 BOARD (SIDE B)

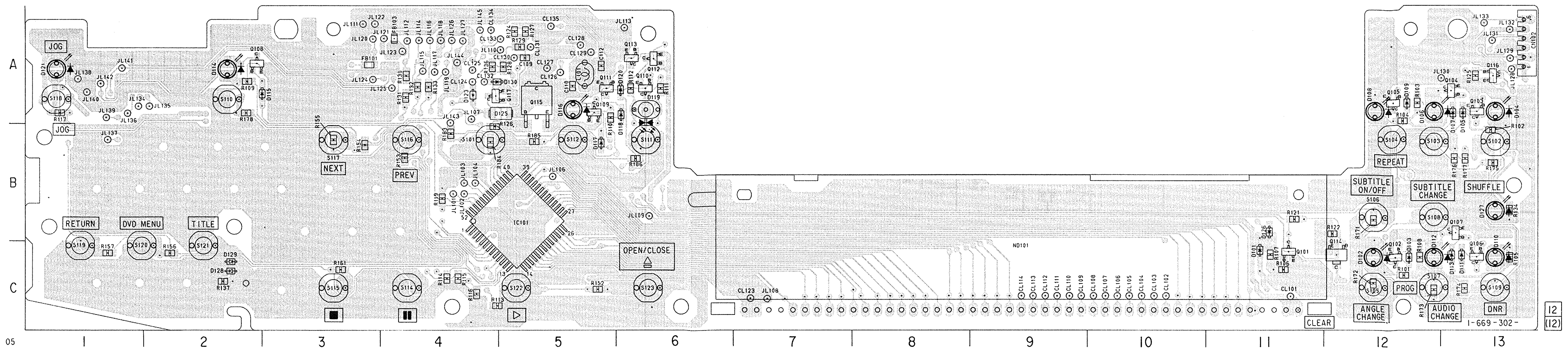

FL-88 BOARD (SIDE B)

CN102	A-13
D121	A-1
D123	A-4
D125	A-4
D130	A-4
IC101	B-5
Q115	A-5
Q117	A-4

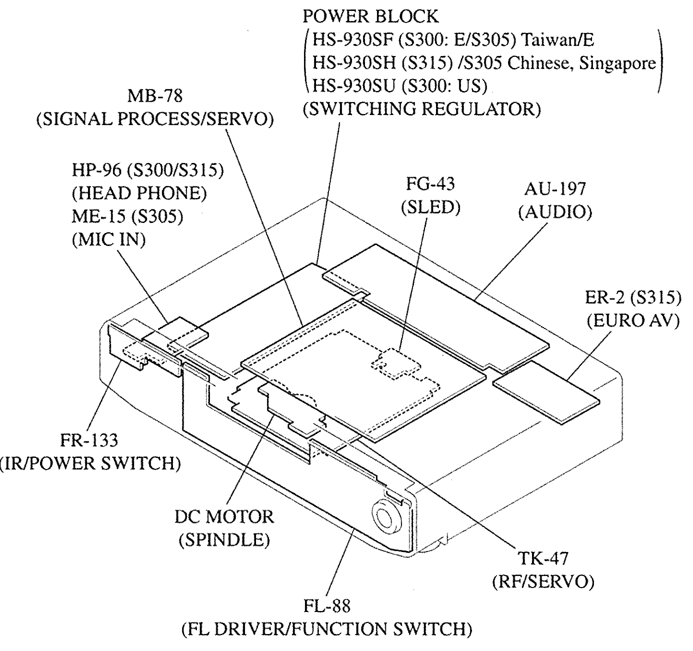

FL-88 (FL DRIVER, FUNCTION SWITCH), FR-133 (IR, POWER SWITCH) SCHEMATIC DIAGRAMS

– Ref. No.: FL-88 board; 2,000 series, FR-133 board; 2,000 series –

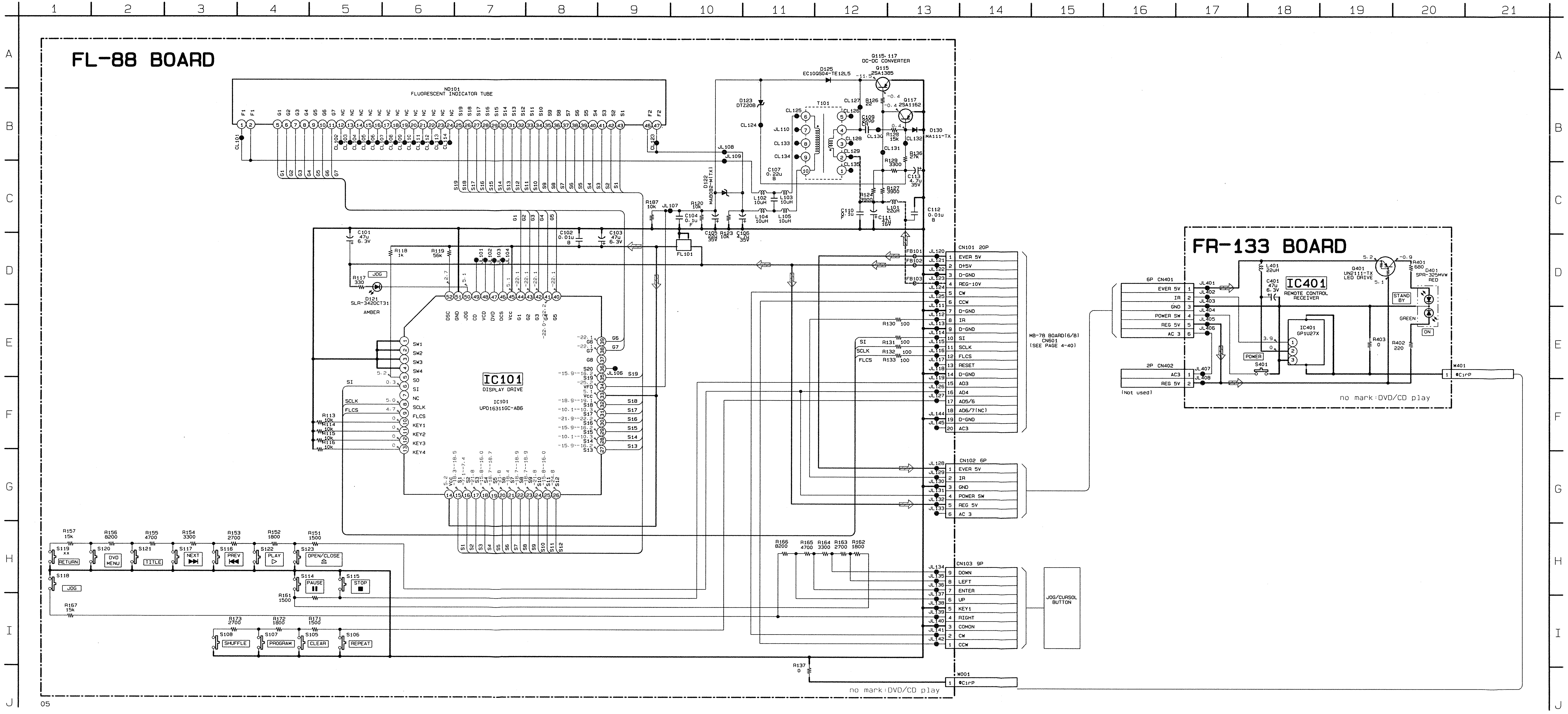

FL DRIVER/FUNCTION SW, IR/POWER SW
FL-88, FR-133

ER-2 (EURO AV) SCHEMATIC DIAGRAM
– Ref. No.: ER-2 board; 2,000 series – (DVP-S315)

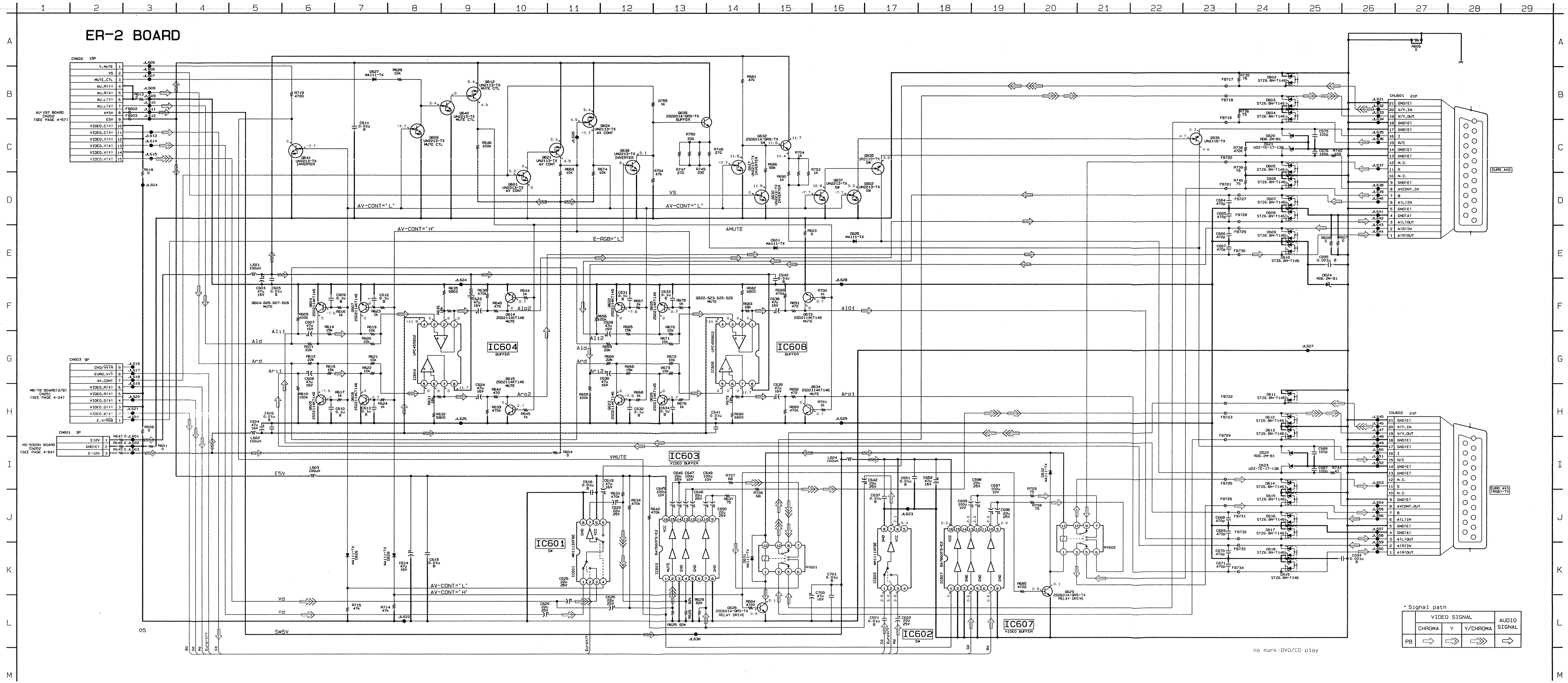

There are few cases that the part isn't mounted in this model is printed on this diagram.

ER-2 BOARD (SIDE A)

D601	C-4
D607	A-5
D608	A-5
D609	A-6
D610	A-6
D616	A-2
D617	A-3
D618	A-3
D619	A-3
D620	A-4
D622	A-1
D623	A-2
D625	C-4
D626	C-2
D627	C-5
D628	B-2
IC603	B-2
IC604	B-4
IC607	B-3
IC608	B-6
Q601	C-4
Q602	C-6
Q604	B-4
Q605	B-4
Q607	A-4
Q608	B-4
Q612	C-5
Q614	A-5
Q615	B-5
Q622	B-5
Q623	B-5
Q625	A-6
Q626	B-5
Q633	A-6
Q634	B-6
Q635	C-5
Q636	A-4
Q637	C-6
Q638	C-4
Q639	C-4

ER-2 BOARD (SIDE A)

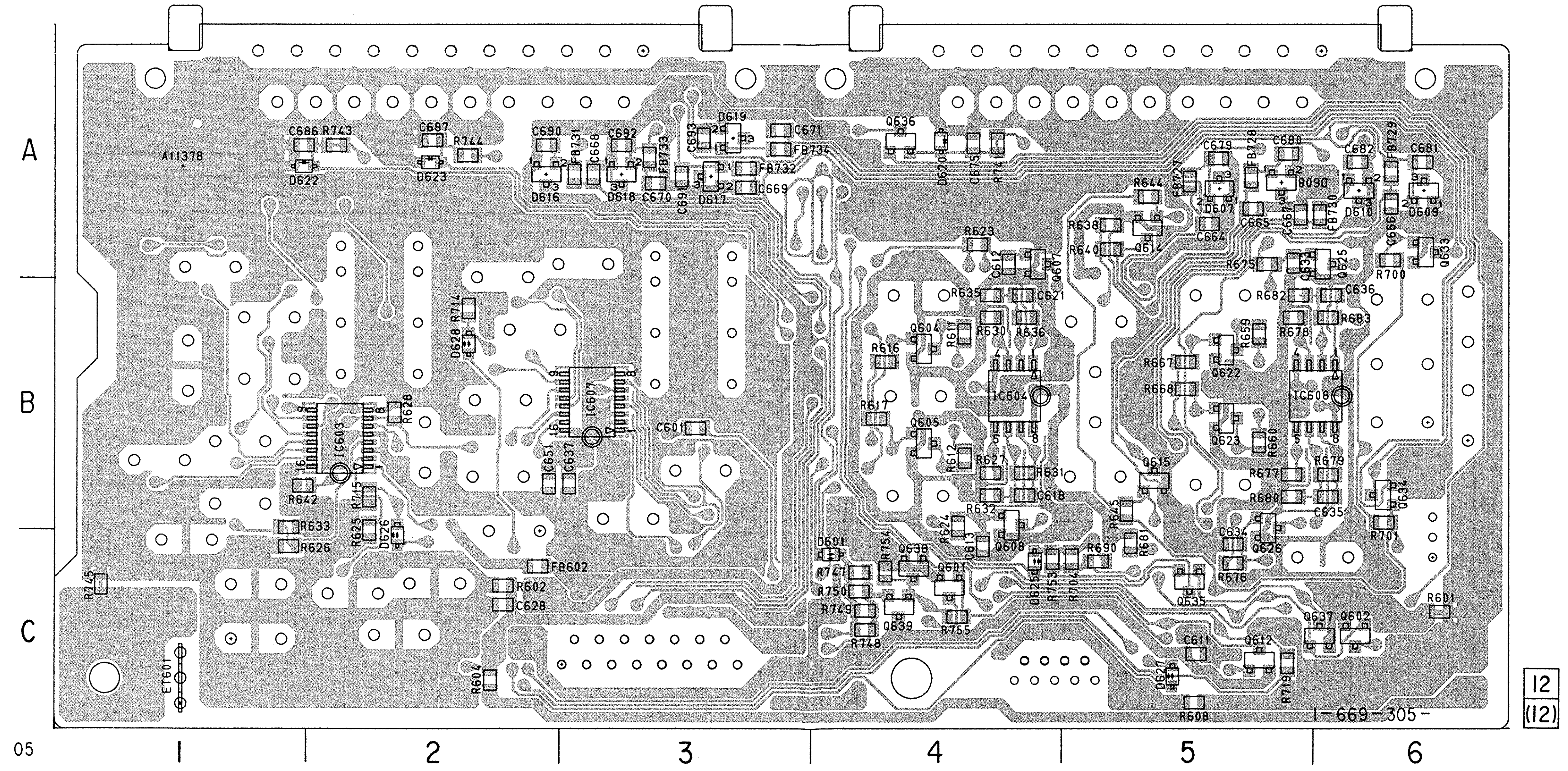

ER-2 BOARD (SIDE B)

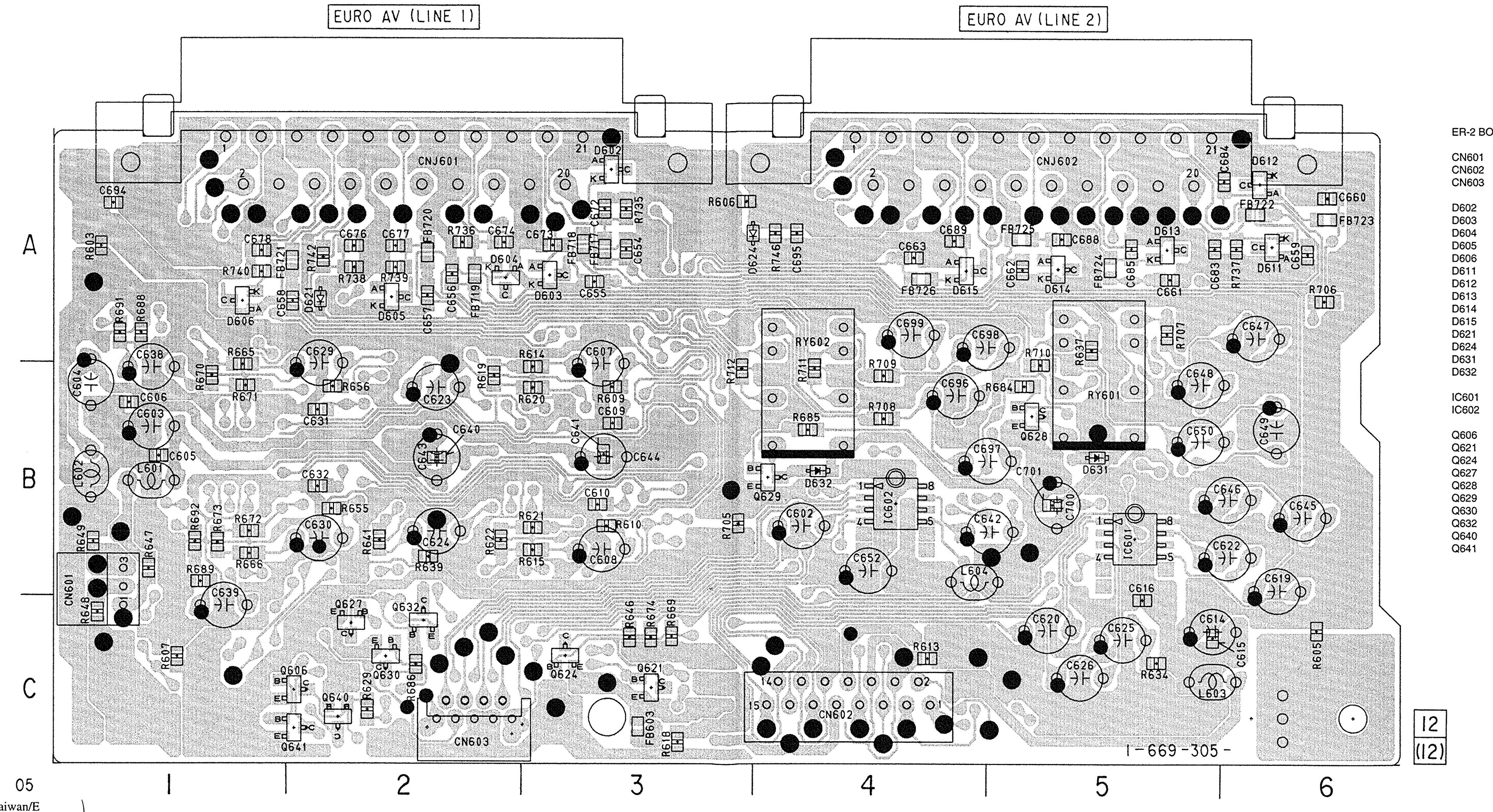

ER-2 BOARD (SIDE B)

CN601	C-1
CN602	C-4
CN603	C-2
D602	A-3
D603	A-3
D604	A-2
D605	A-2
D606	A-1
D611	A-6
D612	A-6
D613	A-5
D614	A-5
D615	A-4
D621	A-2
D624	A-4
D631	B-5
D632	B-4
IC601	B-5
IC602	B-4
Q606	C-2
Q621	C-3
Q624	C-3
Q627	C-2
Q628	B-5
Q629	B-4
Q630	C-2
Q632	C-2
Q640	C-2
Q641	C-2

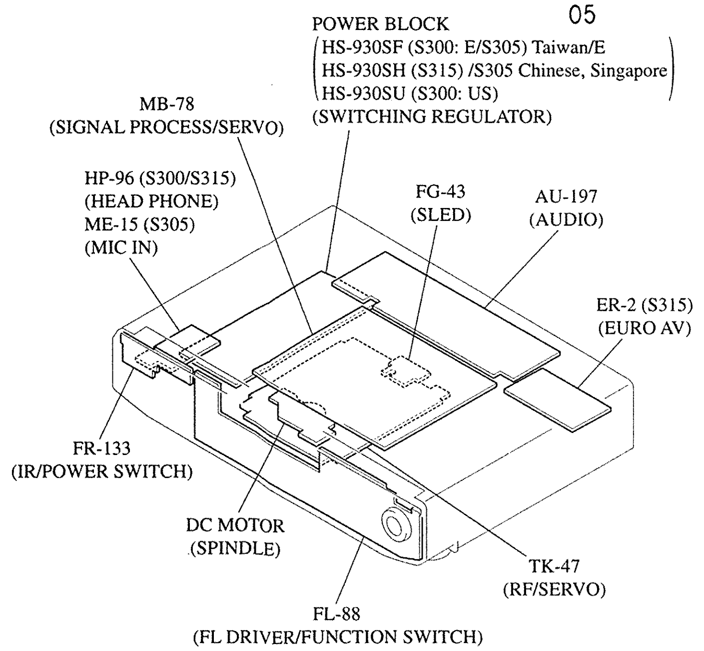

POWER BLOCK (HS-930SF) (POWER) PRINTED WIRING BOARD AND SCHEMATIC DIAGRAM

– Ref. No.: POWER BLOCK (HS-930SF board); 4,000 series – (DVP-S300 (E model)/S305 (E, Taiwan model))

There are few cases that the part isn't mounted in this model is printed on this diagram.

HS-930SF BOARD

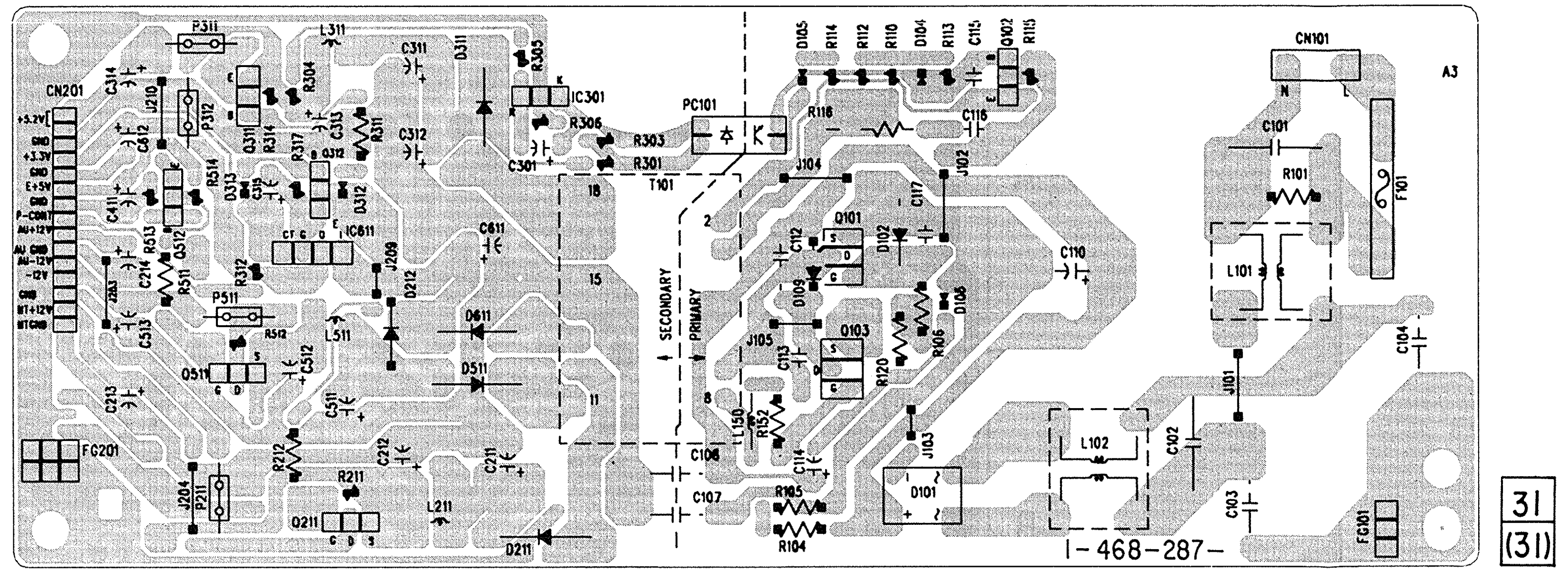

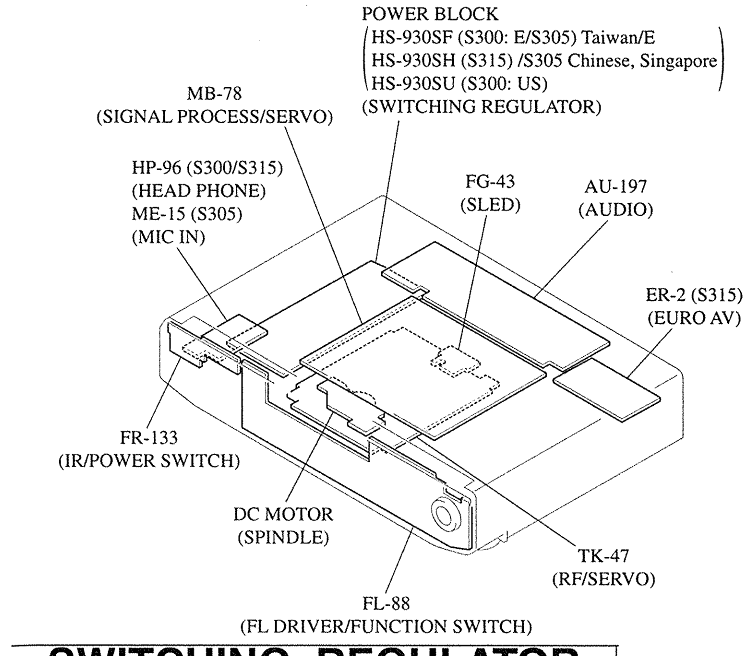

SWITCHING REGULATOR
HS-930SF

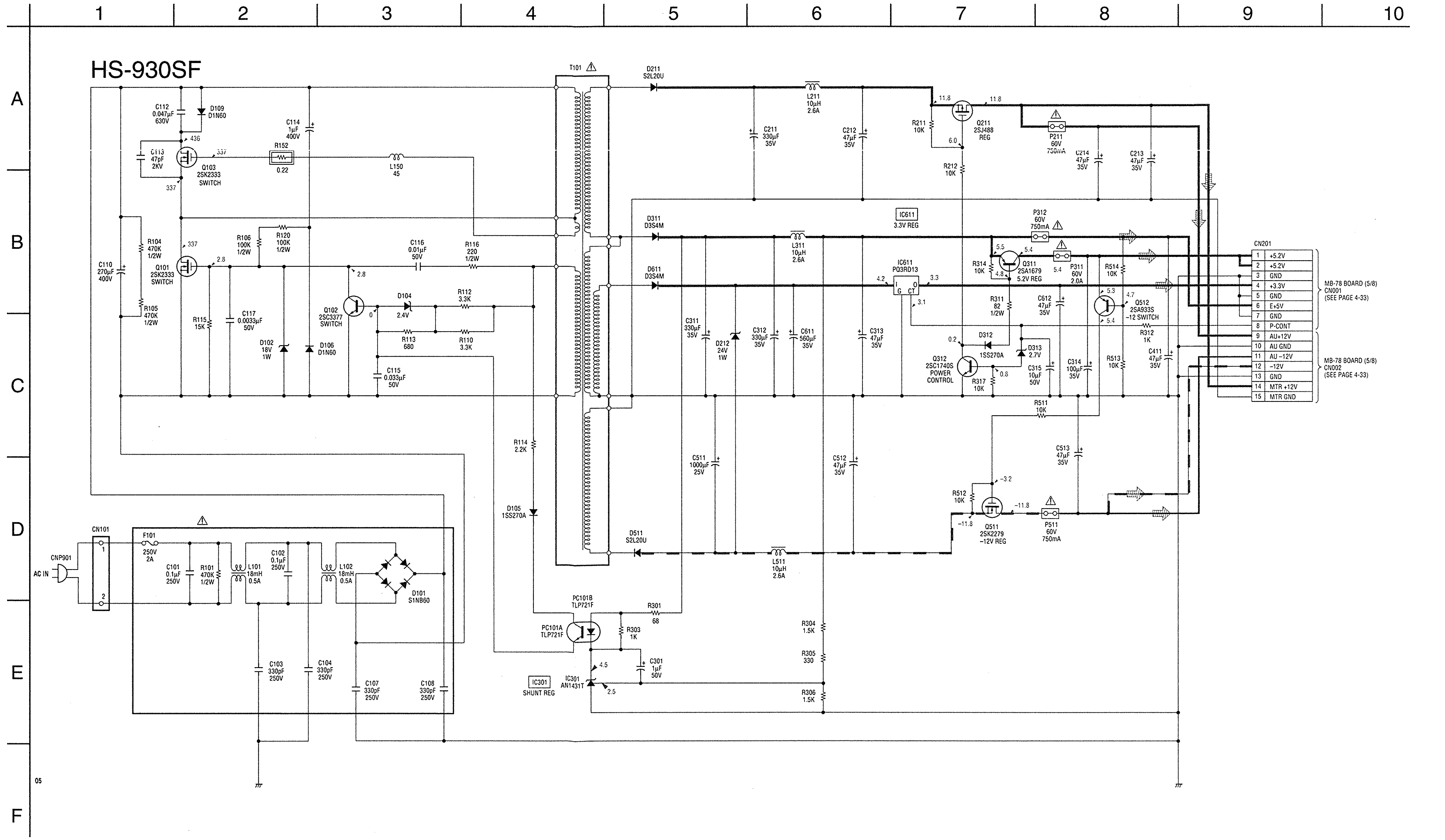

Note: The components identified by mark ⚠ or dotted line with mark ⚠ are critical for safety.
Replace only with part number specified.

POWER BLOCK (HS-930SH) (POWER) PRINTED WIRING BOARD AND SCHEMATIC DIAGRAM

– Ref. No.: POWER BLOCK (HS-930SH board); 4,000 series – (DVP-S315/S305: Chinese, Singapore)

There are few cases that the part isn't mounted in this model is printed on this diagram.

HS-930SH BOARD

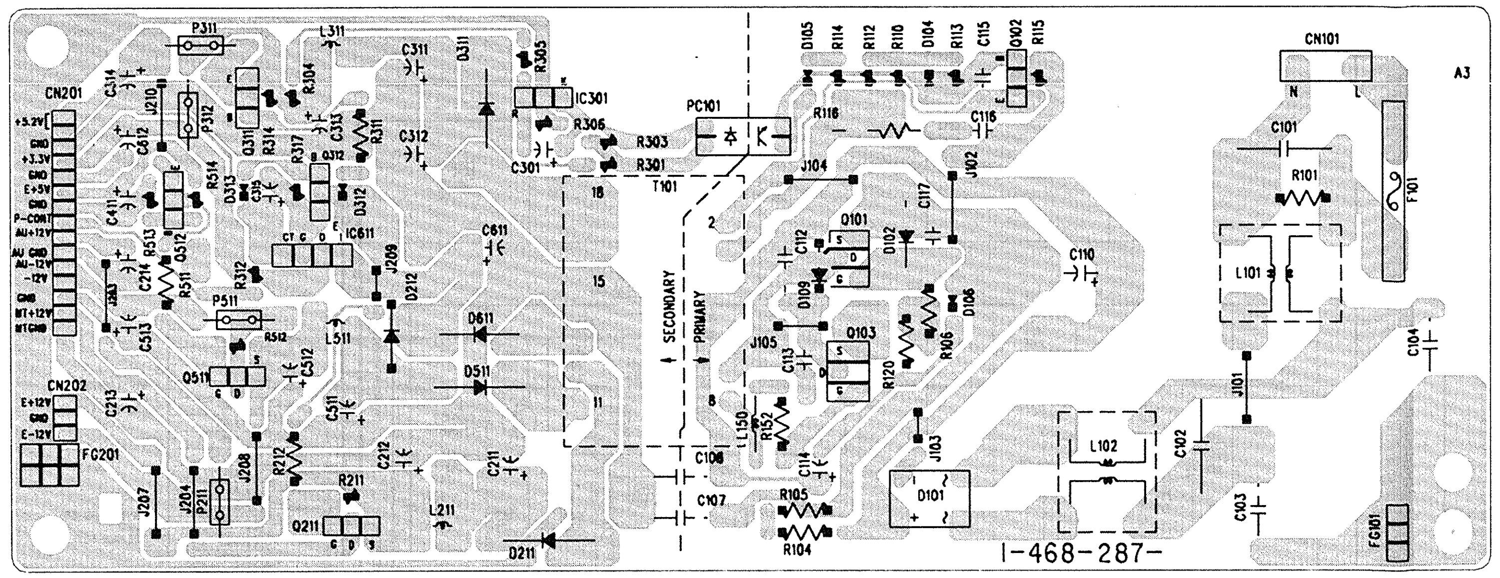

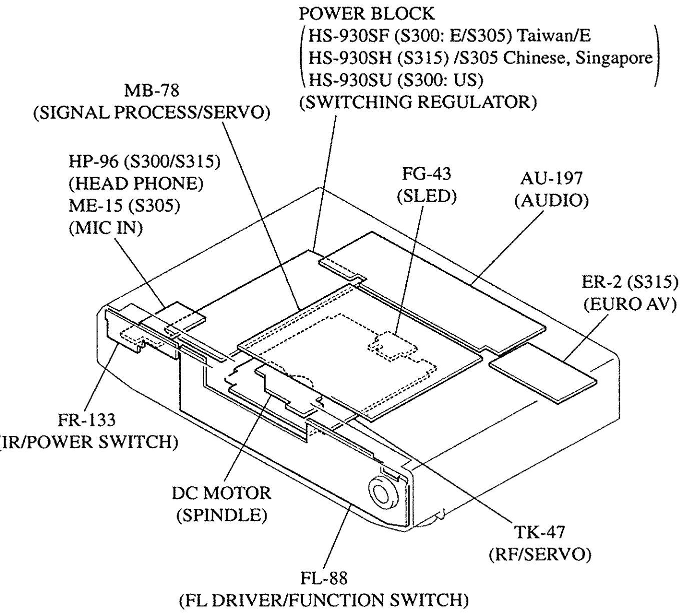

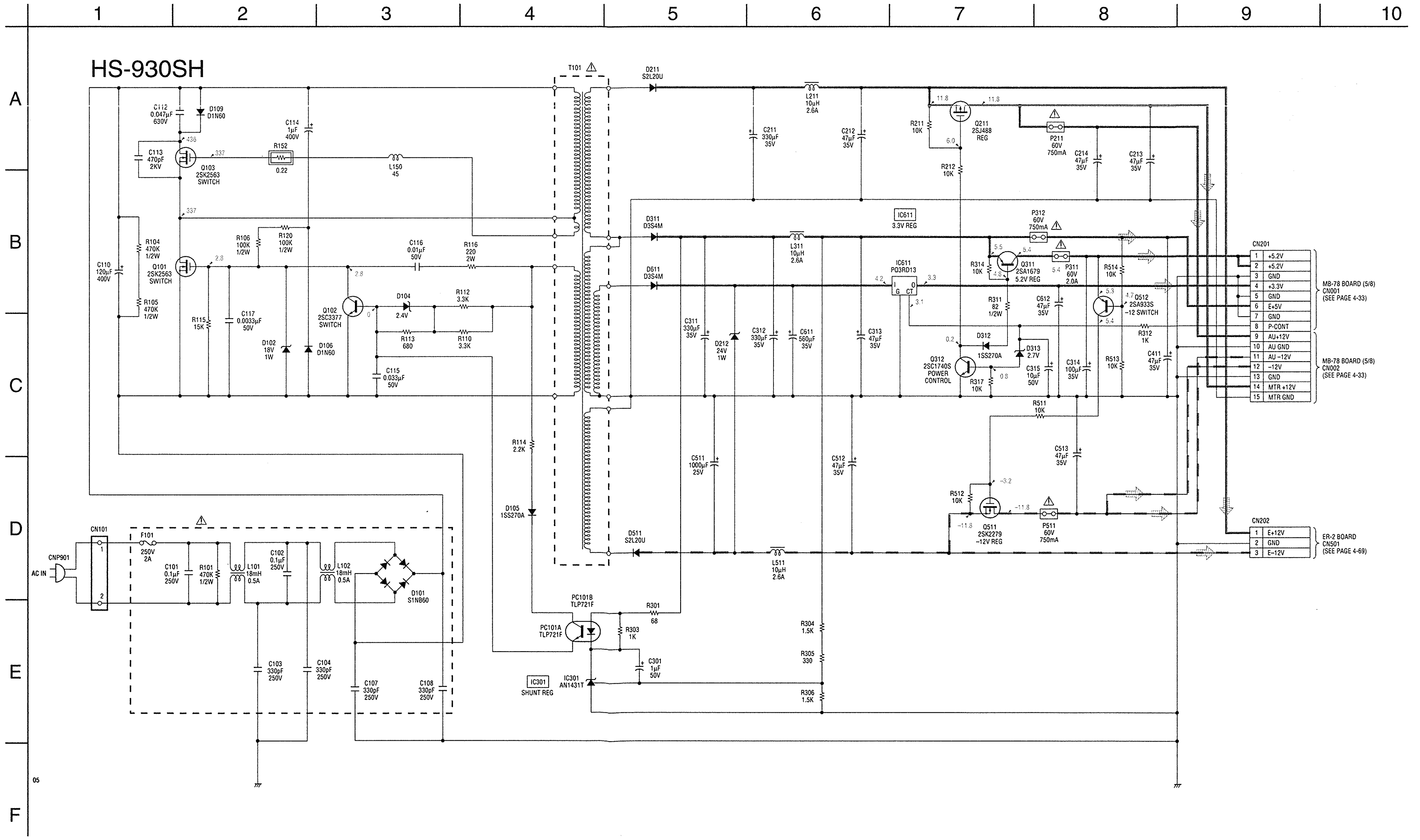

Note: The components identified by mark ⚠ or dotted line with mark ⚠ are critical for safety.
Replace only with part number specified.

SWITCHING REGULATOR
HS-930SH

POWER BLOCK (HS-930SU) (POWER) PRINTED WIRING BOARD AND SCHEMATIC DIAGRAM

– Ref. No.: POWER BLOCK (HS-930SU board); 4,000 series – (DVP-S300 (US model))

There are few cases that the part isn't mounted in this model is printed on this diagram.

HS-930SU BOARD

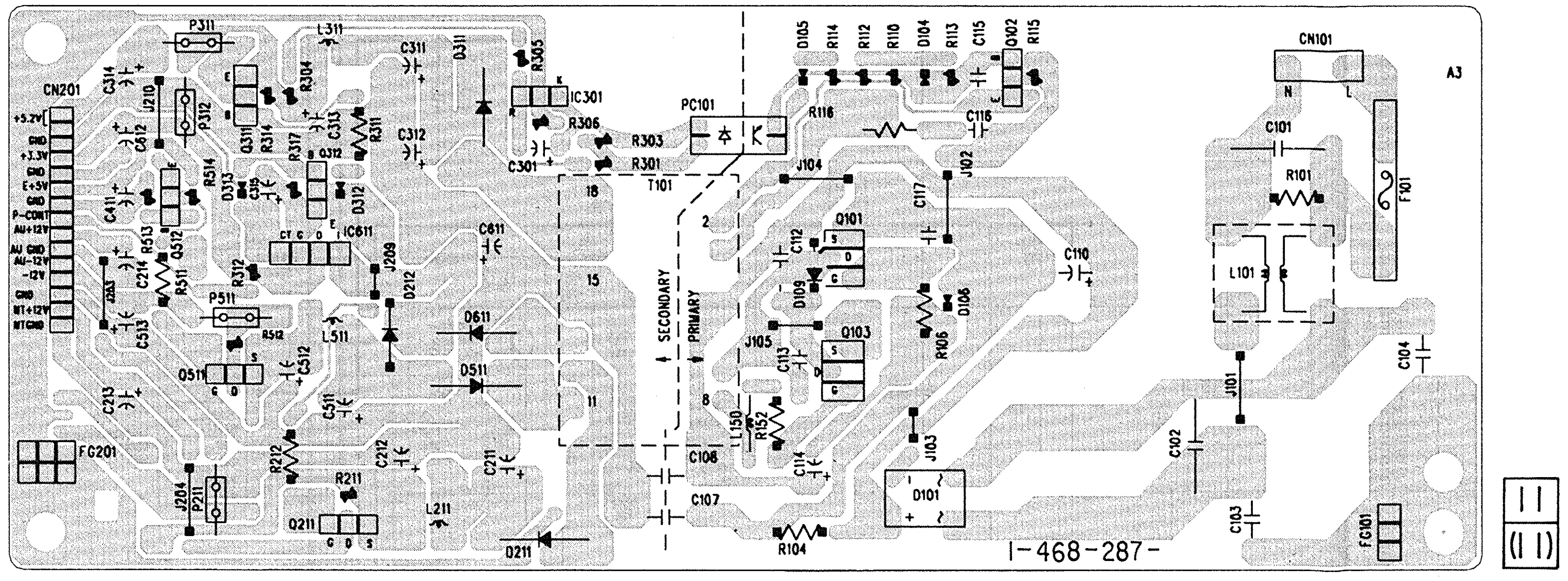

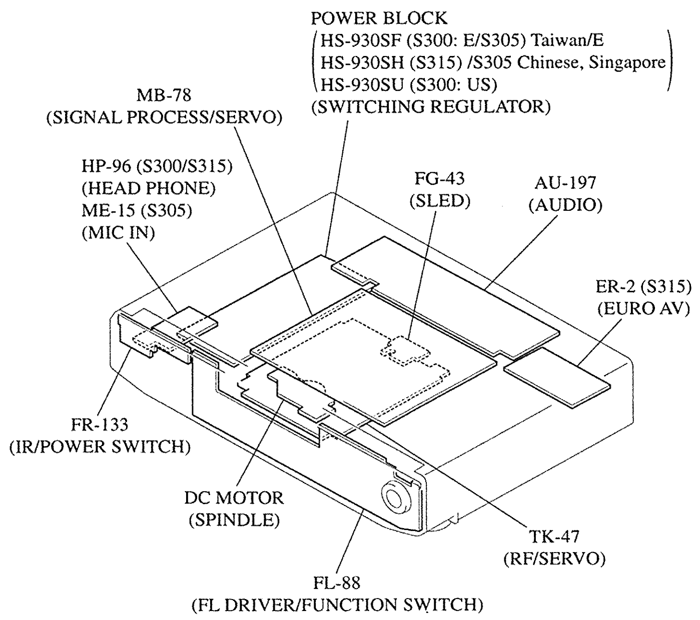

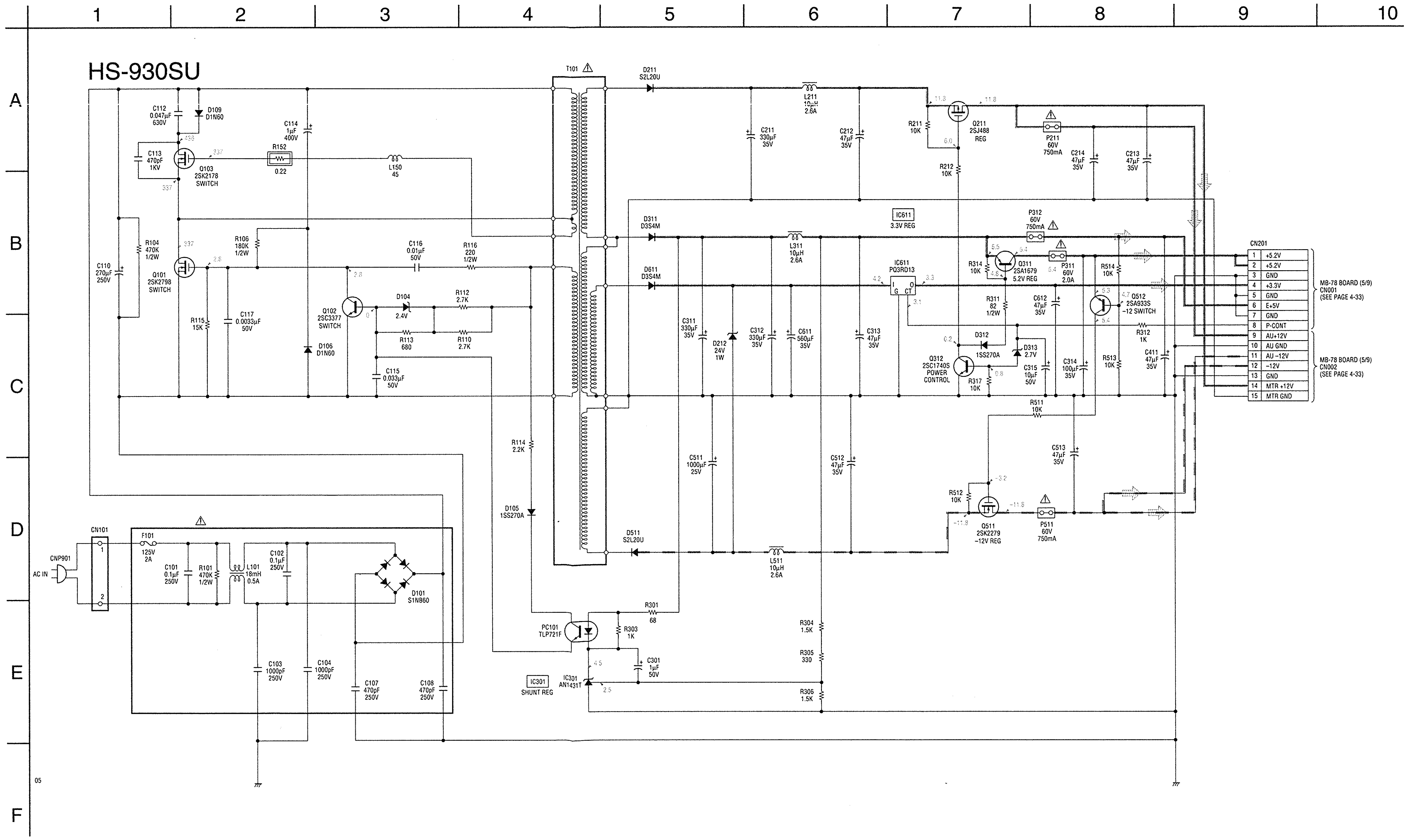

Note: The components identified by mark ⚠ or dotted line with mark ⚠ are critical for safety. Replace only with part number specified.

5-1. INTERFACE CONTROL PIN FUNCTION (IC604 on MB-78 Board (6/8))

Pin No.	Pin Name	I/O	Function
1-4	A16-19	I/O	Set Address
5, 6	TIN0, 1	–	Not used
7, 8	TOT0, 1	–	Not used
9	ALE	O	Output of address latch inable signal
10	OE	O	Output of output inable signal
11	GND	–	GND
12	WRL	O	Output of write inable signal
13	WRH	–	Not used
14	HRQ	–	Not used
15	HAK	–	Not used
16	INTMS	I	Input of ready signal
17	CLK	–	Not used
18	RX	I	Input of serial bus0
19	TX	O	Output of serial bus0
20	SCK	I/O	Serialbus0
21	SI	–	Not used
22	SO	O	Output of serial bus1
23	EVER 5V	–	Digital power supply
24	SCLK	I/O	Serialbus1
25	VIDEO MUTE	O	Output of video mute signal
26	AUDIO MUTE	O	Output of audio mute signal
27	PPG1	–	Not used
28	CGCS	O	Output of charactor generator chip select
29	FL2CS	O	Output of FLCS (for 5ch)
30	FLCS	O	Output of FLCS
31	RESET	O	RESET
32	PPG6	I	Input DIAG
33	P.CONT	O	Output of POWER CONT signal
34, 35	EVER 5V	–	Analog power supply
36, 37	GND	–	GND
38	MIC CONT	I	Input of MIC CONT signal
39	ECHO CONT	I	Input of ECHO CONT signal

Pin No.	Pin Name	I/O	Function
40, 41	AD2, 3	I	Input of AD
42	GND	–	GND
43-46	AD4-7	I	Input of AD
47	SDA	–	Not used
48	SCL	–	Not used
49-51	GND	–	GND
52	HSTX	–	Not used
53	REF V	I	Input of V SYNC
54	IFCS	I	Input of SH interrupt signal
55	ST-BY CONT	I	Input of ST-BY control signal
56	INT3	–	Not used
57	CW	I	Input of JOG control signal
58	CCW	I	Input of JOG control signa
59	IR	I	Input of SIRCS
60	A1 IN	I	Input of control A1 signal
61	A1 OUT	O	Output of control A1 signal
62	DOT I	–	Not used
63	AC-3 OUT	–	Not used
64	STATUS	–	Not used
65-70	MODEL0-5	I/O	Model select1-6
71	1C	I/O	AC3 indicator
72	1D	I/O	S-LINK status
73, 74	MIC IN 1, 2	I	MIC input select
75, 76	SW2, 3	–	Not used
77	RESET IN	I	EXT RESET request
78-80	RCODE0	I/O	REGION set1-3
81	GND	–	GND
82	X OUT	O	Output of X’tal(4MHz)
83	X IN	I	Input of X’tal(4MHz)
84	EVER 5V	–	Analog power supply
85-92	AD0-7	I/O	Address and data set
93-100	A8-15	I/O	Set address

SECTION 5
IC PIN FUNCTION DESCRIPTION

5-2. SYSTEM CONTROL PIN FUNCTION (IC805 on MB-78 Board (8/8))

Pin No.	Pin Name	I/O	Function
1	PB14/$\overline{\text{IRQ6}}$	I	Input of interrupt fromIC506
2	PB15/$\overline{\text{IRQ7}}$	I	Input of interrupt fromIC804
3	VSS	–	Digital ground
4-11	AD0-7	I/O	Data bus AD0-7
12	VSS	–	Digital ground
13, 14	AD8, 9	I/O	Data bus AD8,9
15	VCC	–	Digital power supply
16-21	AD10-15	I/O	Data bus AD10-15
22	VSS	–	Digital ground
23-30	A0-7	O	Address bus A0-7
31	VSS	–	Digital ground
32-39	A8-15	O	Address bus A8-15
40	VSS	–	Digital ground
41, 42	A16, 17	O	Address bus A16,17
43	VCC	–	Digital power supply
44-47	A18-21	O	Address bus A18-21
48	$\overline{\text{CS0}}$	O	Chip select signal for external ROM(ICS803)
49	$\overline{\text{CS1}}$	O	Chip select signal for external ROM(IC802)
50	$\overline{\text{CS2}}$	–	Not used
51	$\overline{\text{CS3}}$	–	Not used
52	VSS	–	Digital ground
53	PA0/$\overline{\text{CS4}}$	O	Reset signal for IC101,209
54	PA1/$\overline{\text{CS5}}$	O	Output of reset signal
55	PA2/$\overline{\text{CS6}}$	O	Output of chip select signal to IC804
56	$\overline{\text{WAIT}}$	I	Input of wait signal
57	$\overline{\text{WRL/WR}}$	O	Output of write signal
58	$\overline{\text{WRH/LBS}}$	–	Not used
59	$\overline{\text{RD}}$	O	Output of read signal
60	PA7/$\overline{\text{BACK}}$	O	Output of reset signal to IC508
61	VSS	–	Digital ground
62	PA8/$\overline{\text{BREQ}}$	O	Output of reset signal to IC101
63	PA9	O	Output of reset signal to IC506
64	PA10	O	Output of A mute signal
65	PA11	O	Output of MA mute signal
66	$\overline{\text{IRQ0}}$	I	Input of interrupt fromIC203
67	$\overline{\text{IRQ1}}$	I	Input of DMA request from IC203
68	$\overline{\text{IRQ2}}$	I	Input of V SYNC(FID) interrupt signal
69	$\overline{\text{IRQ3}}$	I	Input of interrupt from IC804
70	VCC	–	Digital power supply
71	CK	O	Output of internal clock
72	VSS	–	Digital ground
73	EXTAL	–	20MHz crystal connection pin
74	XTAL	–	20MHz crystal connection pin
75	VCC	–	Digital power supply
76	NMI	I/O	Hyper terminal pin
77	VCC (Vpp)	–	Digital power supply
78	$\overline{\text{WDTOVF}}$	–	Not used
79	$\overline{\text{RES}}$	I	Input of reset signal
80	MD0	I	Input of mode select0 (fixed to 1)
81	MD1	I	Input of mode select1 (fixed to 0)
82	MD2	I	Input of mode select2 (fixed to 0)
83, 84	VCC	–	Digital power supply
85	AVCC	–	Analog power supply
86	AVREF	–	Reference power supply
87	PC0/AN0	I/O	Set of mode 1
88	PC1/AN1	I/O	Set of mode 2
89	PC2/AN2	I/O	Set of mode 3
90	PC3/AN3	I/O	Set of mode 4
91	AVSS	–	Analog ground
92	PC4/AN4	I/O	Set of mode 5
93	PC5/AN5	I/O	Set of mode 6
94	PC6/AN6	–	Not used
95	PC7/AN7	–	Not used
96	VSS	–	Digital ground
97	PB0	–	HFG
98	PB1	O	Output of reset signal for IC806
99	VCC	–	Digital power supply
100	PB2	O	Output of control signal for IC101

Pin No.	Pin Name	I/O	Function
101	PB3	–	Not used
102	PB4	–	Not used
103	PB5	–	Not used
104	PB6	–	Not used
105	PB7	–	Not used
106	VSS	–	Digital ground
107	RxD0	I	Input of serial data
108	TxD0	O	Output of serial data
109	RxD1	I	Input of serial data
110	TxD1	O	Output of serial data
111	SCK0	O	Output of serial clock
112	SCK1	O	Output of serial clock

SECTION 6
TEST MODE

6-1. Starting up Test Mode

With the DVP-S300/S305/S315 turned off, press [TITLE], [CLEAR], and [POWER] keys on the Remocon in this order, and the Test mode will start up and the Test Mode Menu as shown in Figure 1 will appear on the video display.

```
Test Mode Menu
0. Syscon Diagnosis
1. Drive Auto Adjustment
2. Drive Manual Operation
3. Mecha Aging
4. Emergency History
5. Other Checks
Exit: POWER key
```

Figure 1

In the Test mode, use all keys on the Remocon or operation panel when performing necessary operation. In any menu except during test with the Syscon Diagnosis menu, press the [POWER] key to exit from the Test mode, and return to the power off status.
Pressing [0] key on the Remocon during display of this initial menu activates the Diagnosis mode and the screen as shown in Figure 2 appears.

```
Syscon Diagnosis
 IF con Ver.                  →IFcon version (checksum)
 SYScon Ver.                  →Syscon version (checksum)
                                (checksum of Syscon is
                                initially 0000)
Model No.  DPX11????          →Model code
** Press Remocon Key **
SIRCS:FF KEY:FF
```

Figure 2

6-2. Selection of Check Item

A check item can be selected when Model No. is displayed. Press numeric keys to check the selected item, or any key other than numeric keys to check all items.

6-2-1. Selected Item Check

As the menu is not displayed, select the number from the list, and enter 2-digit main item No. and 2-digit sub item No. using numeric keys on the Remocon. When the first one digit is entered, the item selection screen is displayed. Then, enter remaining three digits and press [ENTER] key.
When an item is selected, the detail check is executed where in the case of RAM check, all addresses are checked twice by changing the data.
<Example> Select 2-2 ROM Check.
As item No. is <2-2>, enter "0202".

```
Syscon Diagnosis
 IF con Ver. 0.620 (9315)
 SYScon Ver. 0.400 (0000)
Select Diag No.  ; 0 -        →Enter item No.[0]
** Press Remocon Key **
SIRCS:FF KEY:FF
```

Figure 3

```
Syscon Diagnosis
 IF con Ver. 0.620 (9315)
 SYScon Ver. 0.400 (0000)
Select Sub No.  ; 02 -        →Enter item No.[02]
** Press Remocon Key **
SIRCS:FF KEY:FF
```

Figure 4

```
Syscon Diagnosis
 IF con Ver. 0.620 (9315)
 SYScon Ver. 0.400 (0000)
Select Sub No.  ; 02 - 0      →Enter item No.[02-0]
** Press Remocon Key **
SIRCS:FF KEY:FF
```

Figure 5

```
Syscon Diagnosis
 IF con Ver. 0.620 (9315)
 SYScon Ver. 0.400 (0000)
Press Enter     ; 02 - 02     →Enter item No.[02-02]
** Press Remocon Key **
SIRCS:FF KEY:FF
```

Figure 6

Up to here, the [CLEAR] key can be used. Pressing [CLEAR] key clears the selected number, and selection can be retried from the beginning. If [ENTER] key is pressed, the diagnosis of only the selected number is executed, and the result is displayed.

If any key is pressed while the result display is blinking, the screen returns to the initial Test Mode Menu screen. Where visual check is necessary such as a still picture check, or when an error occurred, use [PREV] key for repeated checking. To go to the next step, press [NEXT] key.

If the diagnosis of selected number does not exist, the initial screen is restored when [ENTER] key is pressed.

6-2-2. All Items Check

Press any key other than numeric keys when Model No. is displayed to activate the all items check mode. In the all items check mode, RAM check is simplified. In concrete, only the skipped blocks such as 0-ff, 500-5ff, a00-aff, f00-fff, 1400-14ff, ... (addresses) are checked. Check is executed from the top item of the diagnosis check items list sequentially. In a checking where visual check is not necessary, check progresses to the next item automatically unless an error occurs.
In case of an error or visual check is necessary, press [PREV] key, and the item concerned is repeatedly checked. To go to the next item, press [NEXT] key.

6-3. Error Display

In case of an error, the error code and information are displayed as shown in Figure 7.

```
Syscon Diagnosis
 IF con Ver. 0.620 (9315)
 SYScon Ver. 0.400 (62ED)
RAM Check                  →Check item name
 Error Code: 05            →Error code
 Address   : 01001D87      →Address where error occurred
 Write Data: 20            →Written data (2 – 8 digits)
 Read  Data: FF            →Read data (2 – 8 digits)
SIRCS:FF KEY:FF
```

Figure 7

When the Error Code is other than “05” (write/read data mismatch error), the Address and Data become “0”.

“Diag OK” or “Diag Error End” message blinks, when the check is all finished or stopped. Press a key here, and the screen returns to the initial Test Mode Menu screen.

6-4. General Description of Checking Method

This section describes briefly a checking method of each diagnosis item, following the order of menu.
The number in ( ) in each item indicates a diagnosis item number.

(2) Memory

(2-2) Syscon ROM (IC803) Check

Checksum calculation

Error: Not detected

At addresses from 0x00000 to 0xfffff of Syscon ROM (IC803), checksum is calculated by adding 8-bit data, and the result is displayed with 4-digit number in hexadecimal notation. As the error is not detected, compare the displayed result with original ROM checksum.

(2-3) Syscon RAM (IC802) Check (DMA used)

Syscon ROM (IC803) → Syscon RAM (IC802) matching check

Error 05: Write/read data mismatch error

External RAM (IC802) of IC805 (Syscon) is saved in the stack by 256 bytes each, and ROM data are transferred to the DMA. Then, the data are compared with ROM (IC803) data every byte. In detail check, the bit inverted data are further written, and rechecked. During checking, all interruptions are stopped. Also, variables use only the stacks including save area and bit inverted buffer. As a processing is executed in the closed circuits within this function, the data transfer to stack area also uses the DMA. In the detail check, all areas of external RAM (IC802) are checked twice by inverting the data, but in the simple check, one block is checked, then the subsequent 4 blocks are skipped, and also a check of inverted data is not executed.
If write/read mismatch error occurred, checking can be repeated.

(3) Destination Setting

(3-2) Destination setting Check

I/O port read

Error: Not detected

The destination setting port (I/O) is read, and displayed with hex. number.
Error is not detected.

(4) Gate Array (62000CFh: Peripheral Access Control)

(4-2) Register

Write data → Read data matching check

Error 05: Write/read data mismatch error

Register at adrs=62000CFh (Peripheral Access Control)
Whether written data and read data are matched is checked.
If write/read mismatch error occurred, checking can be repeated.

(4-3) Reset Line

Write → Hard reset → Read

Error 02: Reset error

0xff is written to the register (Peripheral Access Control) at adrs=62000CFh, and whether it is initialized to “0x00” by the reset pulse is checked.

(5) Drive

(5-2) EEPROM (serial) (IC801)

Data write → Read matching check

Error 05: Write/read data mismatch error
11: Serial transfer error
12: EEPROM not ready

16-bit data is written to the address 0 of EEPROM (IC801), and it is read to check for matching. Before checking, the content of address 0 is read for saving, but if it cannot be read, the error is displayed and operation is terminated, and data writing is not executed.
In this diagnosis, 16-bit data is checked. 16 kinds of patterns are written by shifting 1 bit each from 0x0001 toward the left.
If write/read mismatch error occurred, checking can be repeated.
Even if an error occurs after write/read check started, the saved data are written when this diagnosis is quitted, but whether data are written correctly is not guaranteed.

(5-3) SSI (Serial)

Serial register write → Register read matching check

Error 05: Write/read data mismatch error
33: SSI serial transfer error

0x00 – 0xff data are written to the FCCR register for SSI, then they are read to check for matching.
If write/read mismatch error occurred, checking can be repeated.

(5-4) Servo DSP Download

DSP (IC506) code area ROM/RAM discrimination
RAM: Program download → Revision data read
ROM: Revision data read

Error 04: Data read error
13: DSP data not ready

For the Mask ROM, no download can be executed. Download is possible for the RAM only. ROM/RAM is discriminated by the DBUSY signal of DSP (IC506) pin ④ after hardware reset. The diagnosis provides exclusive download flag.
For this flag, download not executed : 0
download already executed : 1
download error : 2
ROM/RAM is discriminated by the status of DBUSY signal after hardware reset. If RAM, the servo control code is downloaded.
If no error is found, the version No. is read from address:200, and displayed.
If ROM, the version No. is read from address:200 immediately. Compare displayed data with existing data.
If RAM, "DSP Download Rev.=xxxx" is displayed.
If ROM, "DSP Mask ROM Rev.=xxxx" is displayed.

(5-5) Servo DSP Register

(Program download) → Data write → Read matching check

Error 04: Data read error
05: Write/read data mismatch error
13: DSP data not ready
14: DSP download error

The download flag is checked, and if 0, the program is downloaded. However, in the case of ROM, it is not downloaded.
Unless download error occurs, the content of address 200h of DSP (IC506) is read for saving, then checking starts. In this check, 16 kinds of patterns are written to the address 200h by shifting 1 bit each from 0x0001 toward the left, then they are read.
If write/read mismatch error occurred, checking can be repeated.

(5-6) Servo DSP Reset Line

Register write → Hard reset → Register read

Error 02: Reset error
13: DSP data not ready
14: DSP download error

In the case of RAM, this diagnosis checks that the register cannot be read after hardware reset. Unless download error occurs, the content of address 200h of DSP (IC506) is read, and after hardware reset, the data is read again for comparison.
The check results in OK, if the register cannot be read, or data are not matched even if it can be read. The reset error occurs if read data are same as that before hardware reset.
In the case of ROM, whether the version No. is initialized by the reset is checked. First, the version No. is read, then its complement is written.
After hardware reset, the data is read again and if it matches the written data, the reset error occurs.

(6) Data Source

(6-2) Register in ARP (IC806)

Register write → Register read matching check

Error 05: Write/read data mismatch error

Data from "0x00" up to "0xff" are written to 12 registers where all bits can be written and read, then read to check for matching.
If write/read mismatch error occurred, checking can be repeated.

(6-3) Reset Line in ARP (IC806)

Register write → Hard reset → Register read

Error 02: Reset error
05: Write/read data mismatch error

After "0xfe" is written to the INTEN3 register, whether it is initialized to "0x00" by the reset pulse signal is checked.
To make sure, the written data is read to check for matching before reset is executed.

(6-4) DRAM (IC810) in ARP

ROM data → ARP (IC806) → DRAM (IC810) → ARP (IC806) read matching check

Error 03: Data write error (ARP (IC806) is not enabled for data writing)
04: Data read error (ARP (IC806) is not enabled for data reading)
05: Write/read data mismatch error

ROM (IC803) patterns are copied to all areas to be checked. Each time 256 bytes are copied, the addresses of copy source (ROM) are returned by 254 bytes. In detail check, all areas are checked to verify all bits in DRAM (IC810), then the inverted data are further checked in the same manner. The bus width of ARP (IC806) is 16 bits. This check program displays addresses in 16 bits.
Overwriting by the shadow can be detected, as the data are written to all areas, then read. In the detail check, all areas of RAM (IC802) are checked twice by inverting the data, while in the simple check one block is checked, then subsequent 4 blocks are skipped, and also inverted data are not checked.
If write/read mismatch error occurred, checking can be repeated.

(6-5) Interrupt Line in ARP (IC806)

Data transfer request → Data transfer stop interruption from ARP (IC806)

Error 21: ARP (IC806) interruption is not detected

AC-3 audio data stored in ROM (IC803) are transferred to the ARP (IC806), then the designated sector data output stop interruption from ARP (IC806) is detected.
To discriminate the Decrypt (IC811) interruption which is also sent in the same line, the Decrypt (IC811) interruption is all masked.

(6-6) Register in Decrypt IC (IC811)

Register write → Register read matching check

Error 05: Write/read data mismatch error

0x00 – 0xfc data (lower 2 bits are masked) are written to the interrupt register, then read to check for matching.
If write/read mismatch error occurred, checking can be repeated.

(6-7) Reset of Decrypt IC (IC811)

Register write → Hard reset → Register read

Error 02: Reset error
05: Write/read data mismatch error

After "0xfc" is written to the interrupt register, whether it is initialized to "0x00" by the reset pulse signal is checked.
To make sure, the written data is read to check for matching before reset is executed.

(6-8) Interrupt Line in Decrypt IC (IC811)

ROM (IC803) → ARP (IC806) → Decrypt (IC811)

Error 22: Decrypt (IC811) interruption is not detected

AC-3 audio data stored in ROM (IC803) are transferred to the Decrypt via ARP (IC806), then the reserved data interruption from Decrypt (IC811) is detected.
To discriminate the ARP (IC806) interruption which is alsosent in the same line, the ARP (IC806) interruption is allmasked.

(6-9) Reserved Data Head Byte Reading

ROM (IC803) → ARP (IC806) → Decrypt (IC811) reserved data head byte read matching check

Error 05: Write/read data mismatch error
22: Decrypt interruption is not detected

AC-3 audio data stored in ROM (IC803) are transferred to the Decrypt via ARP (IC806), then the reserved data head bytes are read from Decrypt (IC811) register.
As this audio data consists of 5 sectors, 0, 1, 2, 3, 4 data are written at the head of reserved data of respective sectors.
Whether these data are matched is checked through every sector interruption.
If write/read mismatch error occurred, checking can be repeated.

(7) AV Decoder (IC203)

(7-2) Register in 64020

Register write → Register read matching check

Error 05: Write/read data mismatch error

"0x00" – "0xff" data are written to 51 registers where all bits can be written/read, then they are read to check for matching.
If write/read mismatch error occurred, checking can be repeated.

(7-3) Reset Line in 64020

Register write → Hard reset → Register read matching check

Error 02: Reset error
05: Write/read data mismatch error

After "0xff" is written to the Capture/Compare Control Register 0, whether it is initialized to "0x00" by the reset pulse signal is checked.
To make sure, the written data is read to check for matching before reset is executed.

(7-4) DREQ Signal Line in 64020

AV Decoder (IC203) DMA check

Error 03: Data write error
04: Data read error
05: Write/read data mismatch error
06: DMA transfer DREQ error
07: DMA transfer address error

The connection of DREQ signal line to the AV Decoder (IC203) is checked through DMA transfer.
If no error is found in DMA transfer, the transferred data are compared with the DRAM (IC810) data read from the register.

(7-5) DRAM in 64020

ROM data → AV Decoder (IC203) → DRAM (IC810) → AV Decoder (IC203) read matching check

Error 03: Data write error
04: Data read error
05: Write/read data mismatch error
06: DMA transfer DREQ error
07: DMA transfer address error

ROM (IC803) patterns are copied to all areas to be checked. Because of large DRAM (IC810) capacity, each time 256 bytes are copied, the addresses of copy source (ROM) are returned by 255 bytes. In detail check, to verify all bits in DRAM (IC810), the bit patterns are checked again after inversion. DMA is used when writing/reading the data. Though the bus width of AV Decoder (IC203) is 64 bits, the display is given in 8 bits. Namely, actual address is 1/8 of displayed data, and lower 3 bits indicate the byte position.
Overwriting by the shadow can be detected, as the data are written to all areas, then read. In the detail check, all areas of RAM are checked twice by inverting the data, while in the simple check one block is checked, then subsequent 4 blocks are skipped, and also inverted data are not checked.
If write/read mismatch error occurred, checking can be repeated.

(7-6) Connection from ARP (IC806) to 64020

ROM data → ARP (IC806) → Decrypt (IC811) → AV Decoder (IC203)

Error 04: Data read error
05: Write/read data mismatch error
06: DMA transfer DREQ error
07: DMA transfer address error
10: Chip-to-chip data transfer error

AC-3 audio data stored in ROM (IC803) are written to the ARP (IC806), then whether they are transferred to the AV Decoder (IC203) is checked. If transfer error is not detected, the address of AV Decoder (IC203) to which data are transferred is displayed on the terminal.
A part of data transferred to the AV Decoder (IC203) is read into Syscon RAM (IC802) through DMA, and compared with ROM (IC803) data.

(7-7) Interrupt Line in 64020

AV Decoder DRAM (IC201, 202) → (DMA COPY) AV Decoder DRAM (IC201, 202) another area

Error 31: AV Decoder interruption is not detected

Data transfer stop interruption which is generated through DMA copy of DRAM (IC201, 202) data in AV Decoder (IC203) to another area is detected.

(8) Video Consumption Concerned

(8-2) 1914 (Serial)

Color bar output (color bar enable command) from Video Encoder (IC252)

Error 11: Serial transfer error

Using the Vsync interruption, serial communication to the Video Encoder (IC252) starts, and the color bar enable command is transferred to the 1914.
The Vsync interruption and internal serial 1 interruption are used.
If no error is found, the message is displayed to prompt for key entry.
Check the color bar output.

(8-3) 1914 Read

ID read → Existing data matching check

Error 40: 1914 ID error

The 1914 device ID is read.
Error if the read value is not “1914 (hex)”.

(8-4) 1914 Vsync

CPU measures the 1914 Vsync interrupt cycle.

Error 41: Vsync interruption is not detected
42: Vsync interrupt cycle error

The number of interruption for 200 msec is counted, and if it is 11 to 13 times, this check is OK. It should be 12 times exactly, but ±1 errors are allowable.

(8-5) Still Picture Output (SDRAM (IC201, 202) direct write)

Pattern data → AV Decoder (IC203) → Video Out

Error 31: AV Decoder (IC203) interruption (DMA transfer) is not detected

The pattern is directly written to the SDRAM (IC201, 202) in AV Decoder (IC203), then its picture display is checked.
First, the brightness signal data are written by the amount of one screen while changing every pixel.
For the color difference signals, both Cr and Cb are set to 80h for monochromic pictures, and the display is turned on.
Then, color difference signal data are written while changing the data every column.
As both brightness signal data and color difference signal data take regular patterns, the processing speed is increased through DMA transfer of the repeated sections.
Further, in detail check the color difference signal data written to the out of display area are copied through DAM transfer to change display colors successively.
If no error is found, the message is displayed to prompt for key entry.
Check the pattern output.

(8-6) Still Picture Output (via ARP (IC806))

ROM picture data → ARP (IC806) → AV Decoder (IC203) → Video Out

Error 10: Chip-to-chip data transfer error

ROM (IC803) data are transferred to the AV Decoder (IC203) via ARP (IC806), and the displayed picture is checked.
If no error is found, the message is displayed to prompt for key entry.
The output picture is same as the start-up picture.

(8-7) DNR (Serial) (IC251)

ROM picture data → ARP (IC806) → AV Decoder (IC203) → DNR (IC251) → Video Out (outline)

Error 10: Chip-to-chip data transfer error

Using special diagnostic command, the output still picture is transferred to the DNR (IC251) for checking.
If no error is found, the message is displayed to prompt for key entry.
This checking is made only for the players with DNR.
The output picture used is same as that in (8-6) Still Picture Output.
The colors will vary extremely, if DNR (IC251) is effective.
For the players without DNR (IC251), the error code 0 is returned.

(8-8) S Terminal DC Check

Color bar output by Video Encoder (IC252)

Error 11: Serial transfer error

The color bars are output in the same manner as in (8-2).
After VS signal is turned on/off repeatedly two times, the color bar output is turned off.

(8-9) EURO-AV Output Check (DVP-S315)

Color bar output by video encoder (IC252)
ROM audio data → ARP (IC806) → AV Decoder (IC203) → 2ch DAC (IC215) → Analog Audio Out

Error 11: Serial transfer error
10: ARP (IC806) n AV decoder (IC203) transfer error
35: 2ch DAC (IC215) serial transfer interruption is not detected
37: PLL DAC (IC209) serial transfer interruption is not detected

With AV-CONT: “H”, E-V/Y: “H”, E-V/RGB: “H”, video and audio signals are output.
For the video signals, the color bars are output same as in (8-2).
For the audio signals, MPEG audio signals of ROM (IC803) data are output same as in (9-7).

(8-10) Y/C Output Check (DVP-S315)

Color bar output by video encoder

Error 11: Serial transfer error

With AV-CONT: “H”, E-V/Y: “L”, E-V/RGB: “H”, video signals areoutput.
For the video signals, the color bars are output same as in (8-2).

(8-11) RGB Output Check (DVP-S315)

Color bar output by video encoder

Error 11: Serial transfer error

With AV-CONT: “H”, E-V/Y: “H”, E-V/RGB: “L”, video signals areoutput.
For the video signals, the color bars are output same as in (8-2).

(8-12) AV CONT Wide Mode Check (DVP-S315)

Color bar output by video encoder

Error 11: Serial transfer error

With AV-CONT: “H”, VS: “H”, video signals are output.
For the video signals, the color bars are output same as in (8-2).

(8-13) AV CONT Through Check (DVP-S315)

Color bar output by video encoder

Error 11: Serial transfer error

Input picture is sent as it is from EURO AV2 (CNJ601) to the AV1 (CNJ602).
The color bars are output from the player, same as in (8-2).
As AV-CONT output signal is turned on/off repeatedly two times, confirm that the picture output is switched between through and color bar alternately.

(9) Audio Concerned

(9-2) Sampling Frequency 44.1kHz

16.9344MHz oscillation

Error 37: PLL DAC (IC209) serial transfer interruption is not detected

Sampling frequency 44.1kHz is set to the PLL DAC (IC209).
If no error is found, the message is displayed to prompt for key entry.
Observe the output waveform of IC209 (CXD8696R) SCK02 pin.

(9-3) Sampling Frequency 48kHz

18.4320MHz oscillation

Error 37: PLL DAC (IC209) serial transfer interruption is not detected

Sampling frequency 48kHz is set to the PLL DAC (IC209).
If no error is found, the message is displayed to prompt for key entry.
Observe the output waveform of IC209 (CXD8696R) SCK02 pin.

(9-4) Sampling Frequency 96kHz

36.8640MHz oscillation

Error 37: PLL DAC (IC209) serial transfer interruption is not detected

Sampling frequency 96kHz is set to the PLL DAC (IC209).
If no error is found, the message is displayed to prompt for key entry.
Observe the output waveform of IC209 (CXD8696R) SCK02 pin.

(9-5) Audio Digital Output

ROM audio data → ARP (IC806) → AV Decoder (IC203) → Digital audio I/F output

Error 10: ARP (IC806) → AV Decoder (IC203) data transfer error
37: PLL DAC (IC209) serial transfer interruption is not detected

AC-3-audio bit stream data stored in ROM (IC803) are transferred to the AV Decoder (IC203) via ARP (IC806), and output to the digital audio interface.
If no error is found, the message is displayed to prompt for key entry.
Analog outputs are muted.

(9-6) Audio Digital Mute

ROM audio data → ARP (IC806) → AV Decoder (IC203) → Digital Audio I/F output

Error 10: ARP (IC806) → AV Decoder (IC203) data transfer error
37: PLL DAC (IC209) serial transfer interruption is not detected

AC-3-audio bit stream data stored in ROM (IC803) are transferred to the AV Decoder (IC203) via ARP (IC806), and output to the Digital Audio Interface. In such a case, the mute signal is turned on/off alternately while the data are output 4 times.
1st time : Mute off Audible
2nd time : Mute on Not audible
3rd time : Mute off Audible
4th time : Mute on Not audible
If no error is found, the message is displayed to prompt for key entry.

(9-7) MPEG Audio Analog Output

ROM audio data → ARP (IC806) → AV Decoder (IC203) → 2ch DAC (IC215) → Analog audio output

Error 10: ARP (IC806) → AV Decoder (IC203) data transfer error
35: 2ch DAC (IC215) serial transfer interruption is not detected
37: PLL DAC (IC209) serial transfer interruption is not detected

MPEG-audio bit stream data stored in ROM (IC803) are transferred to the AV Decoder (IC203) via ARP (IC806), and analog audio data are output from 2ch DAC (IC215).
If no error is found, the message is displayed to prompt for key entry.

(9-8) Dual DAC (Serial)

ROM audio data → ARP (IC806) → AV Decoder (IC203) → 2ch DAC (IC215) → Analog audio output (Attenuation)

Error 10: ARP (IC806) → AV Decoder (IC203) data transfer error
35: 2ch DAC (IC215) serial transfer interruption is not detected
37: PLL DAC (IC209) serial transfer interruption is not detected

MPEG-audio bit stream data stored in ROM (IC803) are transferred to the AV Decoder (IC203) via ARP (IC806), and they are attenuated by 12dB (–12dB) in the 2ch DAC (IC215), then analog audio data are output.
If no error is found, the message is displayed to prompt for key entry.

(9-9) Audio Mute Line

ROM audio data → ARP (IC806) → AV Decoder (IC203) → Analog audio output (Mute)

Error 10: ARP (IC806) → AV Decoder (IC203) data transfer error
35: 2ch DAC (IC215) serial transfer interruption is not detected
37: PLL DAC (IC209) serial transfer interruption is not detected

MPEG-audio bit stream data stored in ROM (IC803) are transferred to the AV Decoder (IC203) via ARP (IC806), and analog audio data are output from 2ch DAC (IC215).
In such a case, first the mute by I/O of SH (IC805), then the mute by setting AV Decoder (IC203), and by setting DAC are turned on respectively to output low frequency tones.
Finally, the mute is turned off to output high frequency tones.
Checking is finished when high frequency tones are heard.
Low tones will be heard before this checking finished, if the mute is not effective.
To make sure which mute is not effective, the check should be repeated while paying attention to the message.
If no error is found, the message is displayed to prompt for key entry.

○ Error Codes in Diagnostic Test

01: Mode not supported is selected
02: Reset error
03: Data write error
04: Data read error
05: Write/read data mismatch error
06: DMA transfer DREQ error
07: DMA transfer address error

10: Chip-to-chip data transfer error
11: Serial transfer error
12: EEPROM is not ready
13: DSP data is not ready
14: DSP download error

21: ARP interruption is not detected
22: Decrypt interruption is not detected

31: AVS Decoder interruption is not detected
32: Servo DSP interruption is not detected
33: SSI interruption is not detected
34: DNR interruption is not detected
35: 2ch DAC interruption is not detected
36: EEPROM interruption is not detected
37: PLL DAC interruption is not detected

40: 1914 ID error
41: Vsync interruption is not detected
42: Vsync interrupt cycle error
43: AC-3 DAC (for main) interruption is not detected
44: AC-3 DAC (for center) interruption is not detected
45: AC-3 DAC (for surrounding) interruption is not detected

52: DIR interruption is not detected
53: V-ENC (CXD1914) interruption is not detected
54: Karaoke DSP (CXD2721Q) interruption is not detected
55: AC-3 Decoder interruption is not detected
56: DIR is not locked
57: AC-3 Decoder – SRAM data bus error
58: AC-3 Decoder – SRAM address bus error

60: Effects IC is not ready
61: Effects IC does not become busy
62: Karaoke DSP is not ready
63: Karaoke DSP does not become busy

90: Judged as error by inspector
91: Check of this item is quitted by key entry
92: Check of all items is quitted by key entry
93: Interruption by time over
99: Other errors

Drive Automatic Adjustment Flowchart

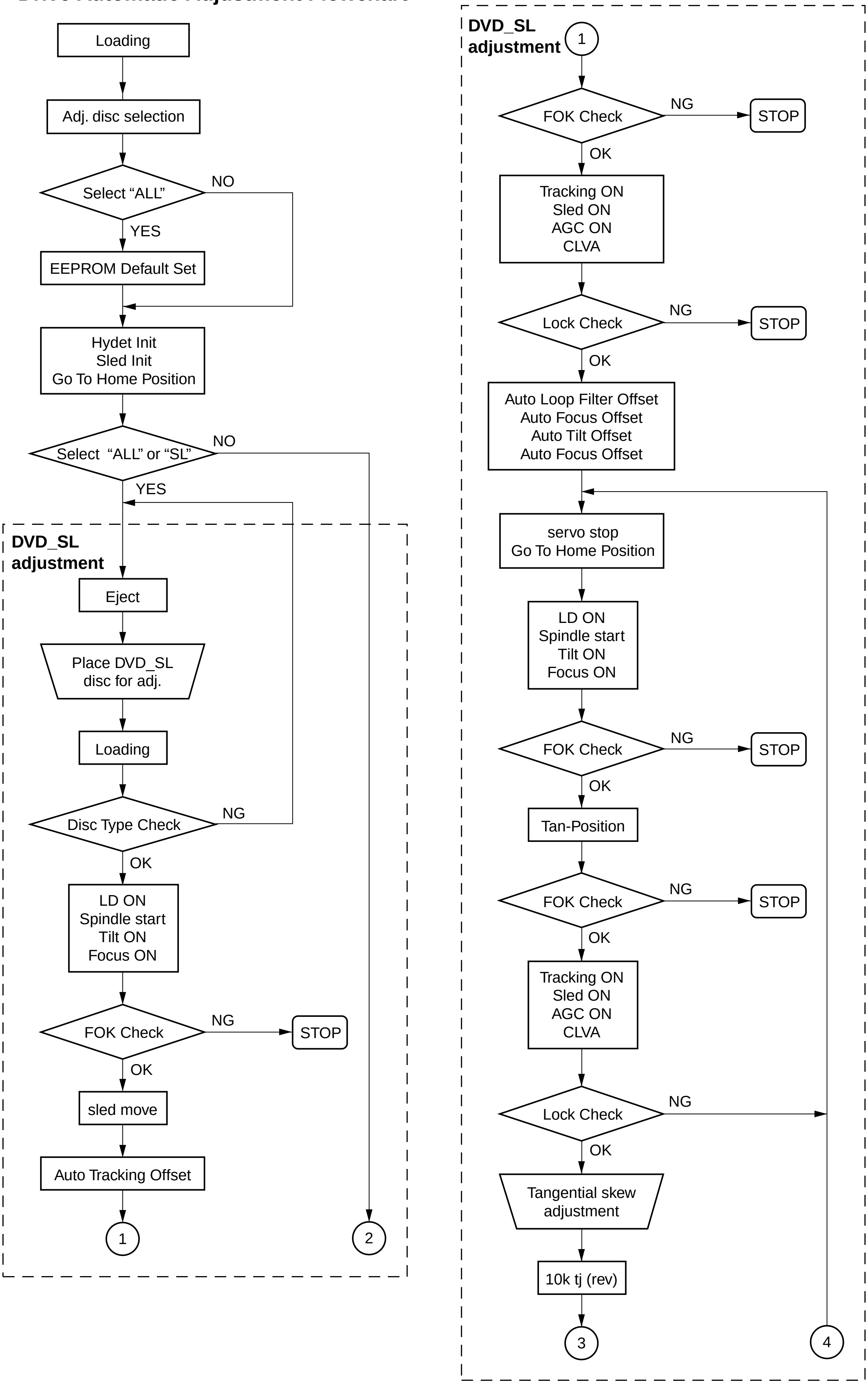

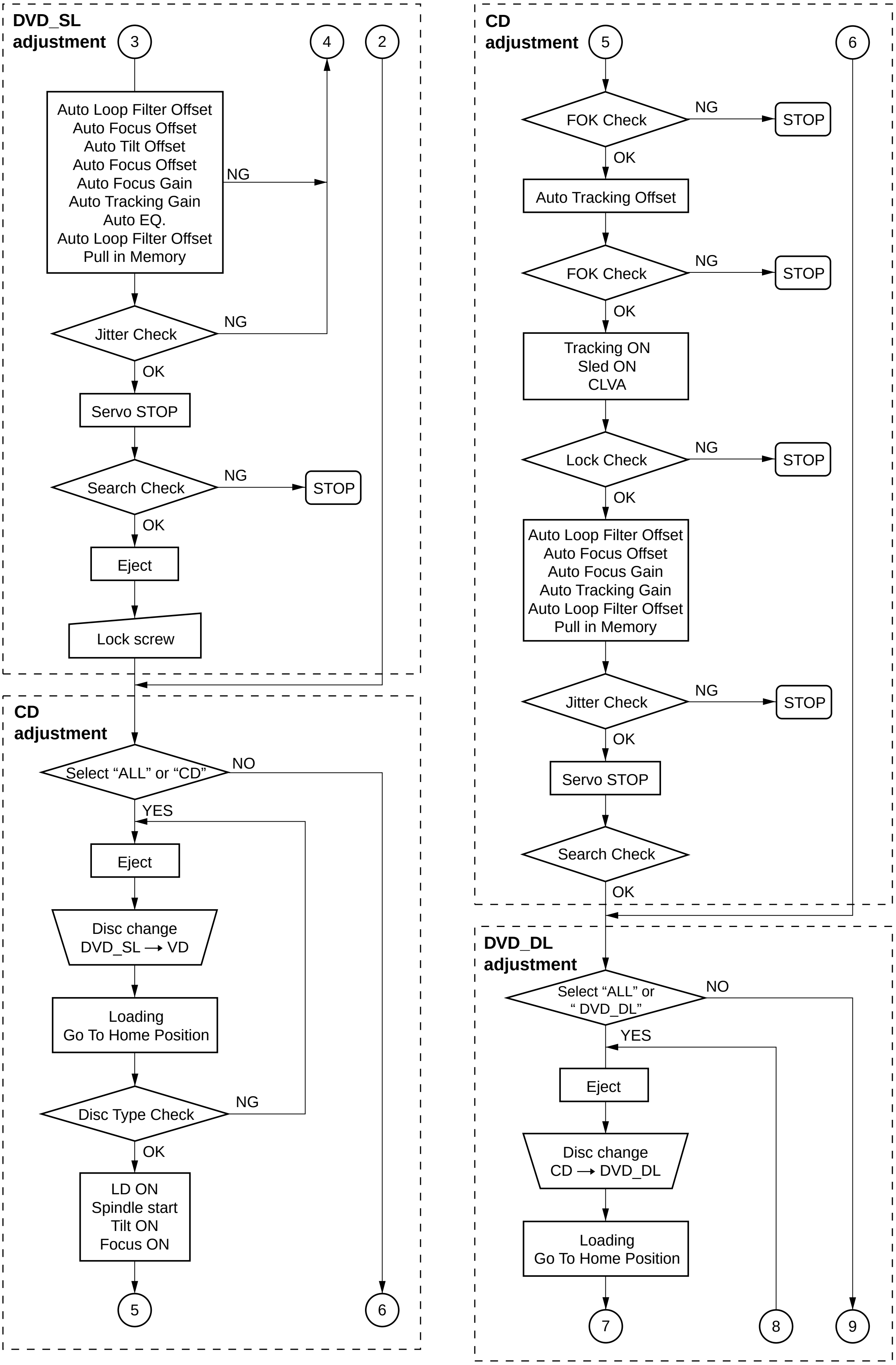

DVD_SL adjustment
3
4
2
Auto Loop Filter Offset
Auto Focus Offset
Auto Tilt Offset
Auto Focus Offset
Auto Focus Gain
Auto Tracking Gain
Auto EQ.
Auto Loop Filter Offset
Pull in Memory
NG
Jitter Check
NG
OK
Servo STOP
Search Check
NG
STOP
OK
Eject
Lock screw
CD adjustment
Select "ALL" or "CD"
NO
YES
Eject
Disc change
DVD_SL → VD
Loading
Go To Home Position
Disc Type Check
NG
OK
LD ON
Spindle start
Tilt ON
Focus ON
5
6
CD adjustment
5
6
FOK Check
NG
STOP
OK
Auto Tracking Offset
FOK Check
NG
STOP
OK
Tracking ON
Sled ON
CLVA
Lock Check
NG
STOP
OK
Auto Loop Filter Offset
Auto Focus Offset
Auto Focus Gain
Auto Tracking Gain
Auto Loop Filter Offset
Pull in Memory
Jitter Check
NG
STOP
OK
Servo STOP
Search Check
OK
DVD_DL adjustment
Select "ALL" or
" DVD_DL"
NO
YES
Eject
Disc change
CD → DVD_DL
Loading
Go To Home Position
7
8
9

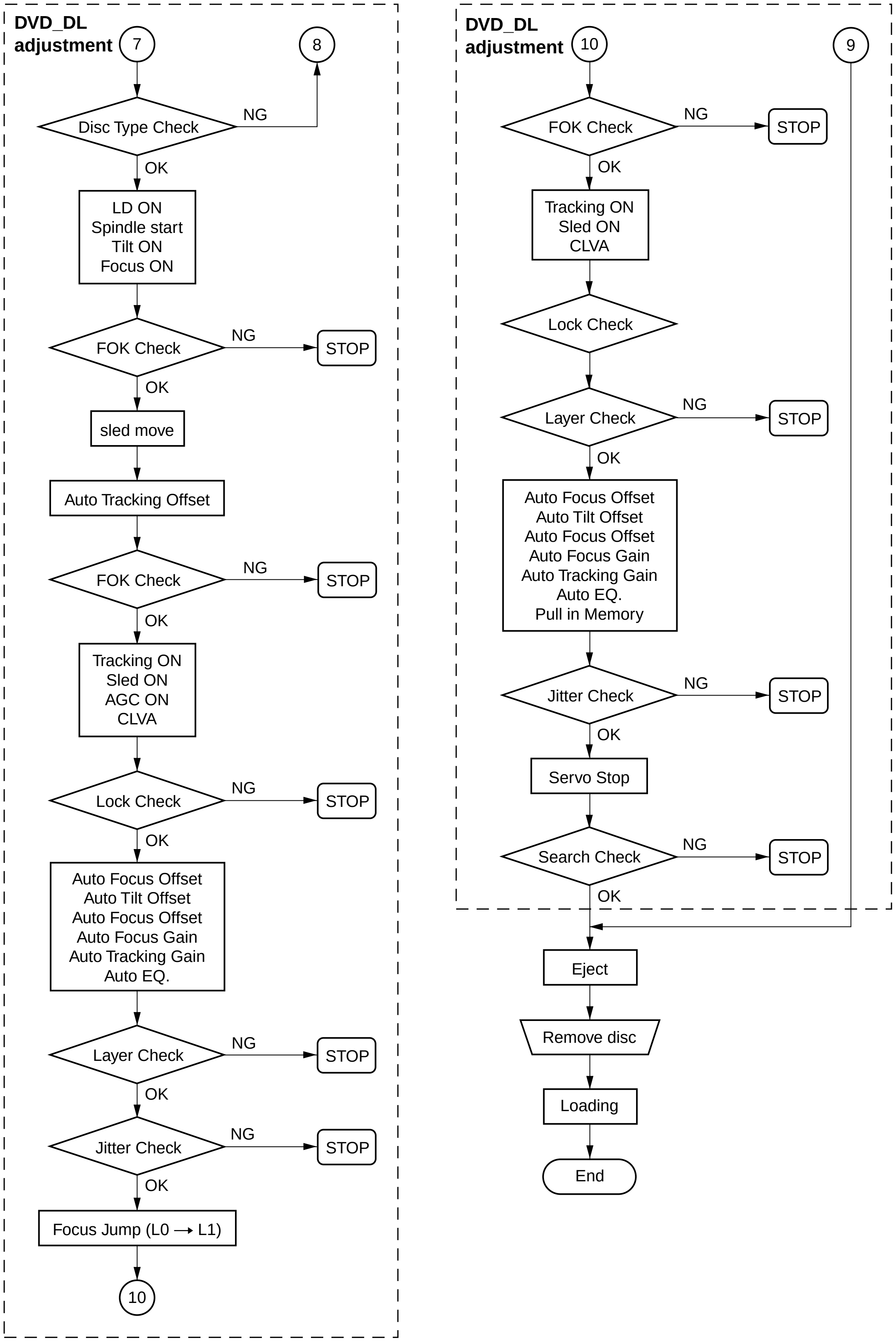
DVD_DL adjustment
7
8
Disc Type Check
NG
OK
LD ON
Spindle start
Tilt ON
Focus ON
FOK Check
NG
STOP
OK
sled move
Auto Tracking Offset
FOK Check
NG
STOP
OK
Tracking ON
Sled ON
AGC ON
CLVA
Lock Check
NG
STOP
OK
Auto Focus Offset
Auto Tilt Offset
Auto Focus Offset
Auto Focus Gain
Auto Tracking Gain
Auto EQ.
Layer Check
NG
STOP
OK
Jitter Check
NG
STOP
OK
Focus Jump (L0 → L1)
10
DVD_DL adjustment
10
9
FOK Check
NG
STOP
OK
Tracking ON
Sled ON
CLVA
Lock Check
Layer Check
NG
STOP
OK
Auto Focus Offset
Auto Tilt Offset
Auto Focus Offset
Auto Focus Gain
Auto Tracking Gain
Auto EQ.
Pull in Memory
Jitter Check
NG
STOP
OK
Servo Stop
Search Check
NG
STOP
OK
Eject
Remove disc
Loading
End

6-5. Drive Auto Adjustment

The drive can be automatically adjusted, except disc change and tangential skew adjustment. For a disc, use the disc for adjustment.
In case of abnormality, press the [stop] key to stop adjustment.
If the drive does not stop, prevent secondary failure by taking proper action such as disconnection of the power cable. This adjustment should be made after repair is finished and no trouble is present in the drive.
A trouble, if present, causes NG and the adjustment to be aborted. As the secondary failure could occur, perform automatic adjustment after the drive is completely repaired.

With the initial menu displayed, press [1] on standard commander, and the screen as shown in Figure 8 will appear.

```
Drive Auto Adjustment
SA.00000   SI.00  EMG.OO


Select No.                   ←Blinking
  0:  All      3:  CD
  2:  DVD SL   4:  DVD-DL


STOP:  Press STOP Key
```

Figure 8

If “All” is selected, the screen shown in Figure 9 is displayed.

```
Drive Auto Adjustment
SA.00000   SI.00  EMG.OO


0:  Adjustment ALL
  0:  All      2:  CD
  2:  DVD SL   3:  DVD-DL


START:  Press ENTER Key      ←Blinking
STOP:  Press STOP Key
```

Figure 9

The tray opens after the ENTER key is pressed and the initialization is finished. Then, place the DVD_SL disc for adjustment. Press the ENTER key to start adjustment. During adjustment, the tangential skew adjustment screen is displayed. Make this adjustment only when the pickup was replaced.
As for adjustment, rotate the T-SKEW adjusting screw on the pickup so that the displayed jitter becomes minimum (CCW makes jitter smaller). Avoid extreme rotation or interference of screwdriver with the disc. After adjustment, a message to apply a screw locking agent will be displayed if jitter value is within the specification. Then, apply a drip of locking agent to the recess of screw. Hence, change discs following the given messages on OSD, and the adjustment is finished if there is no problem.
Note that if “All” is selected, the data of previous adjustment are erased and initial values are set.

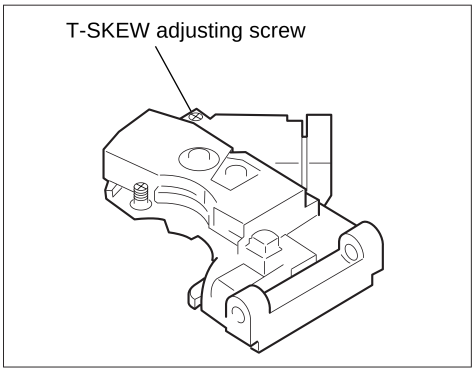

Figure 10

6-6. Drive Manual Operation

In performing manual operation, observe the following points:
Select correct disc type on the Disc Type screen.
First, select “0. Disc TYpe” and execute “7. Hydet init” and “8. Sled init”. (See Figure 11)
In case of abnormality, press [stop] immediately to stop operation and turn off the power.
Do not execute Auto Adjust while executing FG Pause.
Also, as these commands are not protected, take care not to press wrong key.
When PLL is locked, the sector address (or time code) is displayed on the right side of SA.

6-6-1. Drive Manual Operation Menu Screen

```
Drive Manual Operation

SA.000000                  SI.00  EMG.00


0. Disc Type
1. Manual Control 1
2. Manual Control 2
3. Manual Control 3
4. Manual Adjust 1
5. Manual Adjust 2
6. Auto Adjust
7. Check
```

Figure 11

This screen provides a menu for manual operation, and you can go directly to each screen from here. To return to this screen from each screen, press the RETURN key.
If SET UP button is pressed, the screen returns to the Test Mode menu.
For switching between respective screens, use the CLEAR key.

6-6-2. Disc Type

```
Disk type

SA.000000   SI.00       EMG.00


0. DVD SL   12cm         9. Home
1. CD       12cm
2. DVD DL   12cm
3. DVD SL   8cm
4. CD       8cm
5. DVD DL   8cm
6. Disc type check
7. Hydet init
8. Sled init.

DVD SL      12cm
```

Figure 12

On this screen, select the type of disc used.
“6. Disc type check” judges the disc loaded. Confirm that judgment result meets the loaded disc type.
Judgment may fail if adjustment is not made yet immediately after EEPROM Default Set. The CD which is not cut up to the CD detection sensor position is judged as DVD. The optical system will be damaged if other disc is loaded after selecting DVD DL.
Be sure to set the disc type.

6-6-3. Manual Control 1

```
Manual Control 1

SA.000000       SI.00       EMG.00


0. LD           off         7. CLVA
1. SP           off         8. AV
2. Tilt         off         9. Home
3. Focus        off         →. Sled FWD
4. Track        off         ←. Sled RVS
5. Sled         off         ↑ . Tilt Up
6. AGC          off         ↓ . Tilt Down


DVD SL          12cm
```

Figure 13

On this screen, turn on/off servo operation items necessary for playing.
Normally, turn on the items from 0 sequentially, and normal trace is executed at CLVA. In the tracking status, the sector address (or time code (at CD)) is displayed.
If not displayed, the spindle is not locked, which means a failure.
In case of spindle system failure or no RF, the spindle system may run, overriding the control.
In this case, do not press the CLVA.

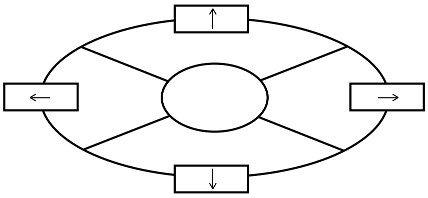

0. LD : Turn on/off the laser diode.
1. SP : Turn on/off the spindle.
At SP ON, the spindle runs in constant velocity mode.
2. TILT : Turn on/off the tilt servo.
3. Focus : Focus searching is executed and focus is turned on.
Operation is terminated if focus is not turned on after focus search is retried about 3 times.
4. Track : Turn on/off the tracking servo.
5. AGC : Turns on/off the focus error auto gain control by PULL IN level.
6. Sled : Turn on/off the sled servo.
7. CLVA : Spindle normal servo.
8. CAV : Spindle in constant velocity mode
9. Home : Return to home position.
→. : Move the sled system outside.
Perform this with the tracking turned off.
←. : Move the sled system inside.
Perform this with the tracking turned off.
↑ . : Move the tilt system up.
↓ . : Move the tilt system down.

6-6-4. Manual Control 2

```
Manual Control 2

SA.000000      SI.00      EMG.00


0. Pause       off        4. Eject
1. FCS. Srch   off        5. Load
3. Tilt_H      off


DVD SL         12cm
```

Figure 14

Eject/Load are not used usually, because they can be done with the Eject button.

0. Pause : Pause is made by executing track jump once per revolution.
1. FCS.Srch : The focus drive system is checked by applying same voltage to the focus drive as that in focus search.
3. Tilt H : Increase tilt gain.
4. Eject : Eject
5. Load : Loading

6-6-5. Manual Control 3

```
Manual Control 3

SA.000000      SI.00          EMG.00


0. FWD         32TJ           6. FT0→1
1. RVS         32TJ           7. FJ1→0
2. FWD         500TJ          8. LJ0→1
3. RVS         500TJ          9. LJ1→0
4. FWD         10KTJ          →. FWD 1TJ
5. RVS         10KTJ          ←. RVS 1TJ

DVD SL         12cm
```

Figure 15

On this screen, track jump, etc. are executed.
Confirm the sector information (SI) to check the DVD_DL layer jump direction. Even SI means layer 0, or odd SI means layer 1.
When 1TJ or 32TJ is executed, the tracking is turned on, but the sled becomes just like initialization.
Also, after executing each jump except 1TJ (and FJ1, 2), the CLVA mode is set.
The optical system will be damaged if make a jump in wrong direction FJ0, FJ1, LJ0 and LJ1.

0. FWD 32TJ : Jump 32 track forward (N track jump).
1. RVS 32TJ : Jump 32 track reversely (N track jump).
2. FWD 500TJ : Jump 500 tracks forward (fine search).
3. RVS 500TJ : Jump 500 tracks reversely (fine search).
4. FWD 10KTJ : Jump 10k tracks forward (direct search).
5. RVS 10KTJ : Jump 10k tracks reversely (direct search).
6. FJ0→1 : After layer jump L0→L1, tracking loop does not turn on.
7. FJ1→0 : After layer jump L1→L0, tracking loop does not turn on.
8. LJ0→1 : After layer jump L0→L1, tracking loop turns on.
9. LJ1→0 : After layer jump L1→L0, tracking loop turns on.
→. FWD 1TJ : Jump one track forward.
←. RVS 1TJ : Jump one track reversely.

6-6-6. Manual Adjust 1

```
Manual Adjust 1

SA.000000      SI.CD          EMG.00


0. TRK. Off set               xx
1. TRK. Off set 2 (DVD)
2. TRK. Gain 2 (CD)
3. Focus Gain
4. TRK. Gain


DVDSL          12cm
```

Figure 16

On this screen, manual adjustment can be made where jitter measurement is not executed.

0. TRK Offset[1] : Adjust tracking offset.
1. TRK. Offset 2 (DVD): Adjust DVD tracking offset (TO SSI). Adjusting range is (A1 – AF) with A1 – A7: +25 to +175 mV, A8 – AF: 0 to –175mV.
2. TRK Gain 2 (CD) : Adjust simple AGC of CD. Adjusting range is (88 – C8) with lower 4 bits fixed.
3. Focus Gain : Adjust focus gain.
4. Tracking Gain[2] : Adjust tracking gain.

[1]TRK Off set : In the tracking offset adjustment for DVD, based on the peak and bottom data measured by DSP, the SSL33P3720A cansels the offset roughly, then the DSP adjusts it finely.
Here, finely adjusted value is set. As adjustment is made by DSP only.
DC component of tracking traverse does not change.
For the CD, only this set value changes.

[2]TRK Gain : In the tracking gain adjustment for CD, based on the peak and bottom data measured by DSP, the CXA2556 on the sets simple AGC to 5 steps of –3.2, –1.6, 0, +1.6, +3.2 dB (Auto Tracking Offset), then the DSP makes setting (Auto Tracking Gain). Here, DSP setting can be made. In the case of DVD, only DSP setting is executed.

6-6-7. Manual Adjust 2

```
Manual Adjust 2

SA.000000      SI.00          EMG.00


0. Jitter                     on
1. Focus       Offset         xx
2. Tilt        Offset
3. L.F.        Offset

                          30
DVD_SL         12cm
```

Figure 17

On this screen, manual adjustment can be made where jitter measurement is executed.

0. Jitter : Turn on/off jitter measurement. Jitter will not be measured unless the drive runs at CLV.
1. Focus Offset : Adjust focus offset.
2. Tilt Offset : Adjust tilt offset.
3. L.F. Offset : Adjust electrical offset in ARP.

6-6-8. Auto Adjust

```
Auto Adjust

SA.000000      SI.00          EMG.00


0. Auto TRK. Offset           xx xx
1. Auto Tilt Offset
2. Auto Focus Offset
3. Auto Focus Gain
4. Auto TRK. Gain
5. auto EQ
6. Auto L.F. Offset
7. Memorize Pullin
DVD_SL                        12cm
```

Figure 18

On this screen, eacf item can be automaticallyadjusted individually.
Note, however, that there are some restriction.

0. Auto TRK Offset : Adjust tracking offset automatically. Adjusted result is reflected on the EEPROM. Turn off tracking with the Focus turned on. Do not execute this at outside track because pickup moves outside. In the case of CD, tracking simple AGC is also adjusted here.
1. Auto Tilt Offset : Adjust tilt offset automatically. Adjusted result is reflected on the EEPROM. Execute this with CLVA turned on. If NG, retry this after focus offset and tangential skew are adjusted.
2. Auto Focus Offset: Adjust focus offset automatically. Adjusted result is reflected on the EEPROM. Execute this with CLVA turned on. If NG, retry this after tilt offset and tangential skew are adjusted.
3. Auto Focus Gain : Adjust focus gain automatically. Adjusted result is reflected on the EEPROM. Execute this with CLVA turned on if possible. If NG, the system will be defective, and repair it.
4. Auto TRK gain : Adjust tracking gain automatically. Adjusted result is reflected on the EEPROM. Execute this with CLVA turned on if possible. If NG, the system will be defective, and repair it.
5. Auto EQ : Adjust RF equalizer properly. Adjusted result is not reflected on the EEPROM. Execute this with CLVA turned on.
6. Auto L.F. Offset : Adjusts electrical offset in ARP. The adjusted value is applied to the EEPROM. During adjustment, lock the CLV.
7. Memorize Pullin : Sets the pull-in level to the EEPROM.

6-6-9. Check

```
check

SA.000000      SI.00          EMG.00


1. EEPROM Default set         (set)
6. EEPROM Data


    DVD_SL                    12cm
```

Figure 19

On this screen, various checking can be made. Note, however, that some items such as EEPROM Default set are not recoverable.

1. EEPROM Default set : Use this to set EEPROM set values to default values. Before executing this, it is recommended to record current values.
6. EEPROM data : Display EEPROM set values list. Display is made with HEX numbers “00” – “FF”.

6-6-10. EEPROM data screen display

```
EEPROM data
                    CD    DVD
ID      No.   00          SL    L0    L1
Focus Offset        80    80    80    80
Focus Gain          30    18    30    30
TRK Offset          80    80    80    80
TRK. CONT.          ??    ??    ??    ??
TRK Gain            30    30    30    30
Tilt Offset         80    80    80    80
Pullin Level        9e    9f    ab    ab
EQ. Boost           ??    ??    ??    ??
L.F.O               ??    ??    ??    ??
SD. ?? HY. ??
```

Figure 20

This screen displays various set values including adjusted results stored in the EEPROM.

ID No. : Nothing is displayed (00 is displayed)
Focus Offset : 00 – FF 80 center (DVD_SL)
Focus Gain : 00 – 7F 20 center (DVD_SL)
TRK. Offset : 00 – FF 80 center (DVD_SL)
TRK. CONT. : Refer to Manual adjust 1 Tracking offset 2 and Tracking gain.
TRK. Gain : 00 – 7F 20 center (DVD_SL)
Tilt Offset : 00 – FF 80 center (DVD_SL)
Pullin Level : 80 – FF D0 center (DVD_SL)
EQ. Boost : Fixed according to the disc type.
L.F.O : Only lower 5 bits are effective.
SD. : About 50 – E0
HY. : About 60 – A0

6-7. Other Operation

For manual operation of the drive, the following operations are available, besides the operations given on the menu screen. (Common to front panel and remote commander)

Eject/Loading	OPEN/CLOSE	Stop+Ejection, and Loading
CLEAR	CLEAR button	Movement throughout the menu
Stop	STOP button	Servo stop
Retrun	RETURN button	Return to drive manual operation
Set up	SET UP button	STOP, then return to test mode menu
Cursol key	→↑ keys	Increase manually adjusted value
Cursol key	← keys	Decrease manually adjusted value
Power	POWER button	Power OFF

SECTION 7
ELECTRICAL ADJUSTMENT

In making adjustment, refer to 7-4. Adjustment Related Parts Arrangement.

Note: During diagnostic check, the characters and color bars can be seen only with the NTSC monitor. Therefore, for diagnostic check, use the monitor that supports both NTSC and PAL modes

This section describes procedures and instructions necessary for adjusting electrical circuits in this set.

Instruments required:
1) Color monitor TV
2) Oscilloscope 1 or 2 phenomena, band width over 100 MHz, with delay mode
3) Frequency counter (over 8 digits)
4) Digital voltmeter
5) Standard commander
6) DVD reference disc
   HLX-502 (J-6090-068-A) (dual layer)
   HLX-503 (J-6090-069-A) (single layer)

7-1. Power Supply Check

1. HS-930SF/930SH/930SU Board

Mode	E-E
Instrument	Digital voltmeter
+5.2V Check	
Test point	CN201 ① pin
Specification	5.2 V ± 0.2 V
+3.3V Check	
Test point	CN201 ④ pin
Specification	3.3 V ± 0.2 V
EVER +5V Check	
Test point	CN201 ⑥ pin
Specification	5.4 V ± 0.2 V
P_CONT Check	
Test point	CN201 ⑧ pin
Specification	4V – 5 V
AU +12V Check	
Test point	CN201 ⑨ pin
Specification	12 V $^{+1.0}_{-2.0}$ V
AU –12V Check	
Test point	CN201 ⑪ pin
Specification	–12 V $^{+2.0}_{-1.0}$ V
–12V Check	
Test point	CN201 ⑫ pin
Specification	–12 V $^{+2.0}_{-1.0}$ V
MTR +12V Check	
Test point	CN201 ⑭ pin
Specification	–12 V $^{+1.0}_{-2.0}$ V

Checking method:
1) Confirm that each voltage satisfies the specification.

7-2. Adjustment of System Control

1. 27MHz Free Run (MB-78 board)

<Purpose>

27 MHz is the reference clock for the MPEG system, and if it is not adjusted correctly, checking of 22 MHz and 33 MHz lock in the following steps will result in NG.

Mode	E-E
Test point	IC206 ⑧ pin
Instrument	Oscilloscope, Frequency counter
Adjusting element	CT201
Specification	27000000 ± 100 Hz

Adjusting method:

1) Confirm that the waveform at TP018 is normal.
2) Adjust CT201 to attain 27000000 ± 100 Hz.

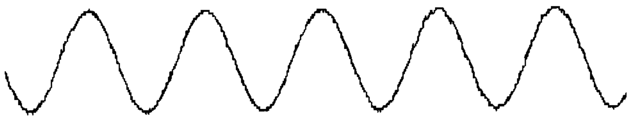

Figure 7-1

7-3. Adjustment of Video System

1. Video Level Adjustment (MB-78 board)

<Purpose>

This adjustment is made to satisfy the NTSC Standard, and if not adjusted correctly, the brightness will be too large or small.

Mode	CXD1914 (ENC) check in test mode menu “0” Syscon Diagnosis
Signal	Color bars
Test point	CN252 ⑭ pin (terminating 75 Ω)
Instrument	Oscilloscope
Adjusting element	RV251
Specification	1 ± 0.02 Vp-p

Adjusting method:

1) In the test mode initial menu “0” Syscon Diagnosis, set so that CXD1914 color bars are generated.
2) Adjust the RV251 to attain 1 ± 0.02 Vp-p.

Figure 7-2

2. S-terminal Output Check (MB-78 board)

<Purpose>

Check S-terminal video output. If it is incorrect, pictures will not be displayed correctly in spite of connection to the TV with an S-terminal cable.

Mode	CXD1914 (ENC) check in test mode menu “0” Syscon Diagnosis
Signal	Color bars
Test point	CN252 ⑩ pin (terminating 75 Ω)
Instrument	Oscilloscope
Specification	1 ± 0.05 Vp-p

Checking method:

1) In the test mode initial menu “0” Syscon Diagnosis, set so that CXD1914 color bars are generated.
2) Confirm that the S-Y level is 1 ± 0.05 Vp-p.

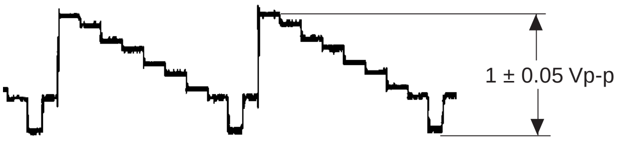

Figure 7-3

3. Checking Component Video Output B-Y (MB-78 board) (DVP-S315 only)

<Purpose>

This checks component video output B-Y. If it is incorrect, correct colors will not be displayed when connected to, for instance, projector.

Mode	CXD1914 (ENC) check in test mode menu “0” Syscon Diagnosis
Signal	Color bars
Test point	CN251 ④ pin (terminating 75 Ω)
Instrument	Oscilloscope
Specification	700 ± 30 mVp-p

Checking method:

1) Confirm that the B-Y level is 700 ± 30 mVp-p.

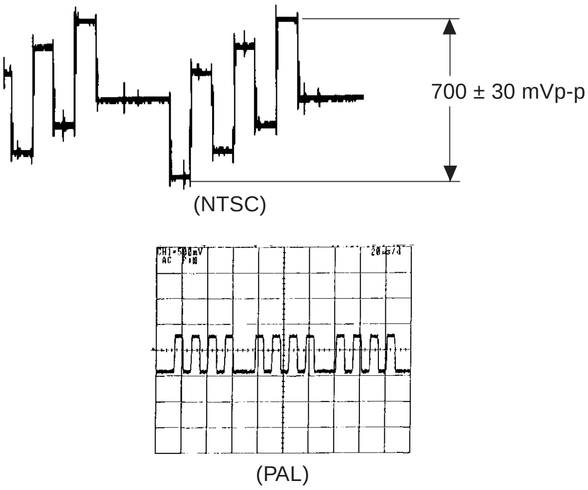

Figure 7-4

4. Checking Component Video Output R-Y (MB-78 board) (DVP-S315 only)

<Purpose>

This checks component video output R-Y. If it is incorrect, correct colors will not be displayed when connected to, for instance, projector.

Mode	CXD1914 (ENC) check in test mode menu “0” Syscon Diagnosis
Signal	Color bars
Test point	CN251 ⑧ pin (terminating 75 Ω)
Instrument	Oscilloscope
Specification	700 ± 30 mVp-p

Checking method:

1) Confirm that the R-Y level is 700 ± 30 mVp-p.

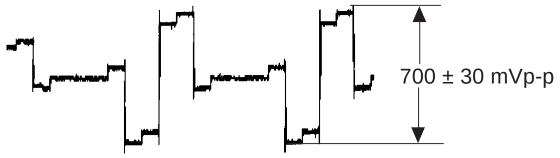

(NTSC)

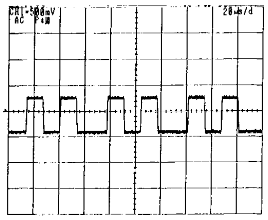

(PAL)

Figure 7-5

5. Checking Component Video Output Y (MB-78 board) (DVP-S315 only)

<Purpose>

This checks component video output Y. If it is incorrect, correct brightness will not be attained when connected to, for instance, projector.

Mode	CXD1914 (ENC) check in test mode menu “0” Syscon Diagnosis
Signal	Color bars
Test point	CN251 ⑥ pin (terminating 75 Ω)
Instrument	Oscilloscope
Specification	1 ± 0.05 Vp-p

Checking method:

1) Confirm that the Y level is 1 ± 0.05 Vp-p.

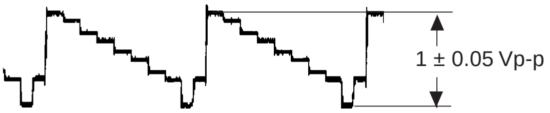

(NTSC)

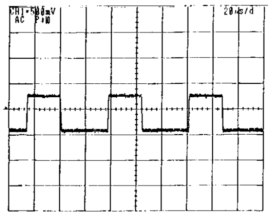

(PAL)

Figure 7-6

6. Checking S Video Output S-C (MB-78 board)

<Purpose>

This checks whether the S-C satisfies the NTSC Standard. If it is not correct, the colors will be too dark or light.

Mode	CXD1914 (ENC) check in test mode menu “0” Syscon Diagnosis
Signal	Color bars
Test point	CN252 ⑫ pin
Instrument	Oscilloscope
Specification	286 ± 20 mVp-p

Connection:

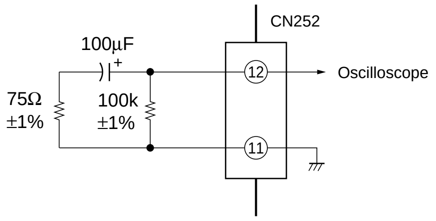

Checking method:

1) Confirm that the S-C burst is 286 ±20 mVp-p.

Figure 7-7

7. Checking S Video Output DC Level (MB-78 board)

<Purpose>

This checks signals for S1 and S2 compatible TV. If they are not correct, the TV will not switch automatically to letter box, etc.

Mode	CXD1914 (ENC) check in test mode menu “0” Syscon Diagnosis
Signal	Color bars
Test point	CN252 ⑫ pin
Instrument	Digital voltmeter
Specification	S-terminal 0V: 0V S-terminal 5V: $5.0^{+0}_{-1.5}$V

Connection:

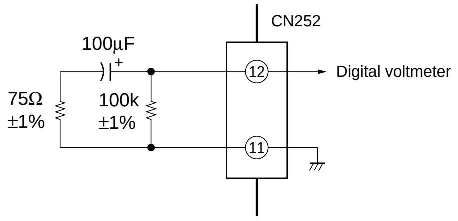

Checking method:

1) In the test mode initial menu “0” Syscon Diagnosis, select S-terminal 0 V.
   Confirm that the voltage at CN252 ⑫ pin is 0 V.
2) Press any key to select S-terminal 5V.
   Confirm that the voltage at CN252 ⑫ pin is $5.0^{+0}_{-1.5}$V.

7-4. Adjustment Related Parts Arrangement

MB-78 BOARD (Side A)

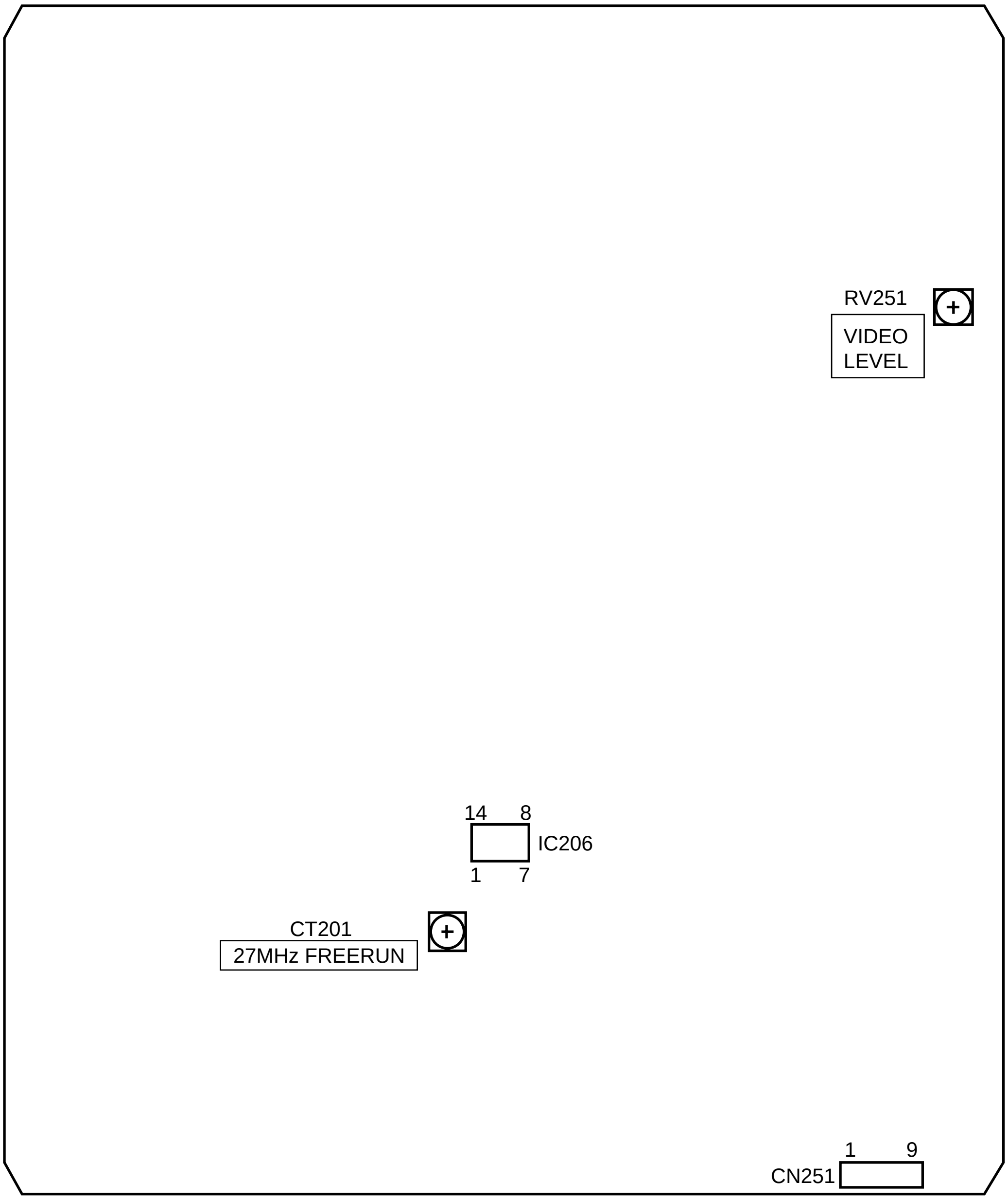

HS-930SF/930SH/930SU BOARD (Side A)

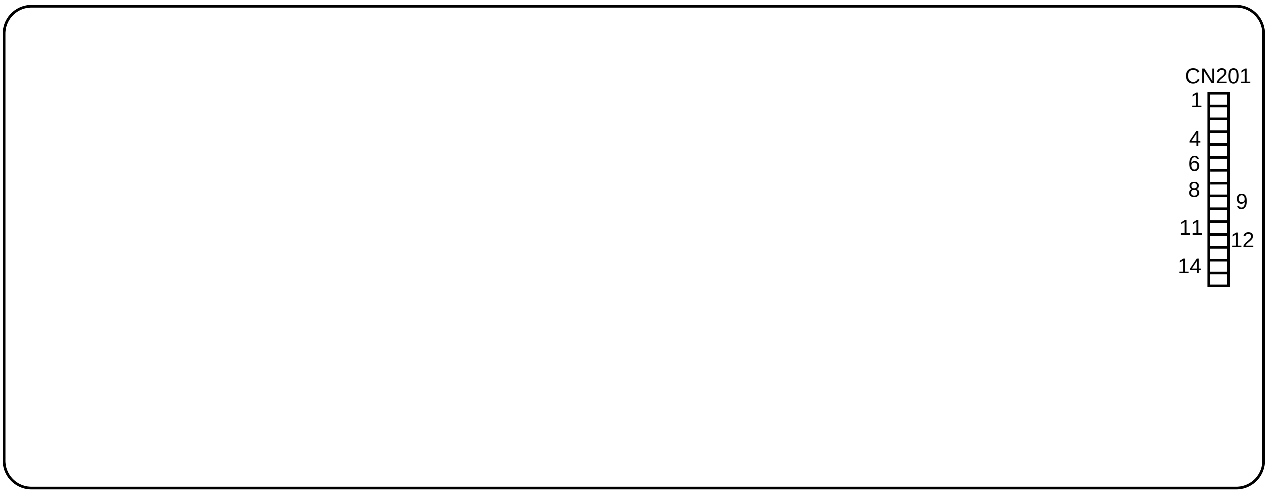

MB-78 BOARD (Side B)

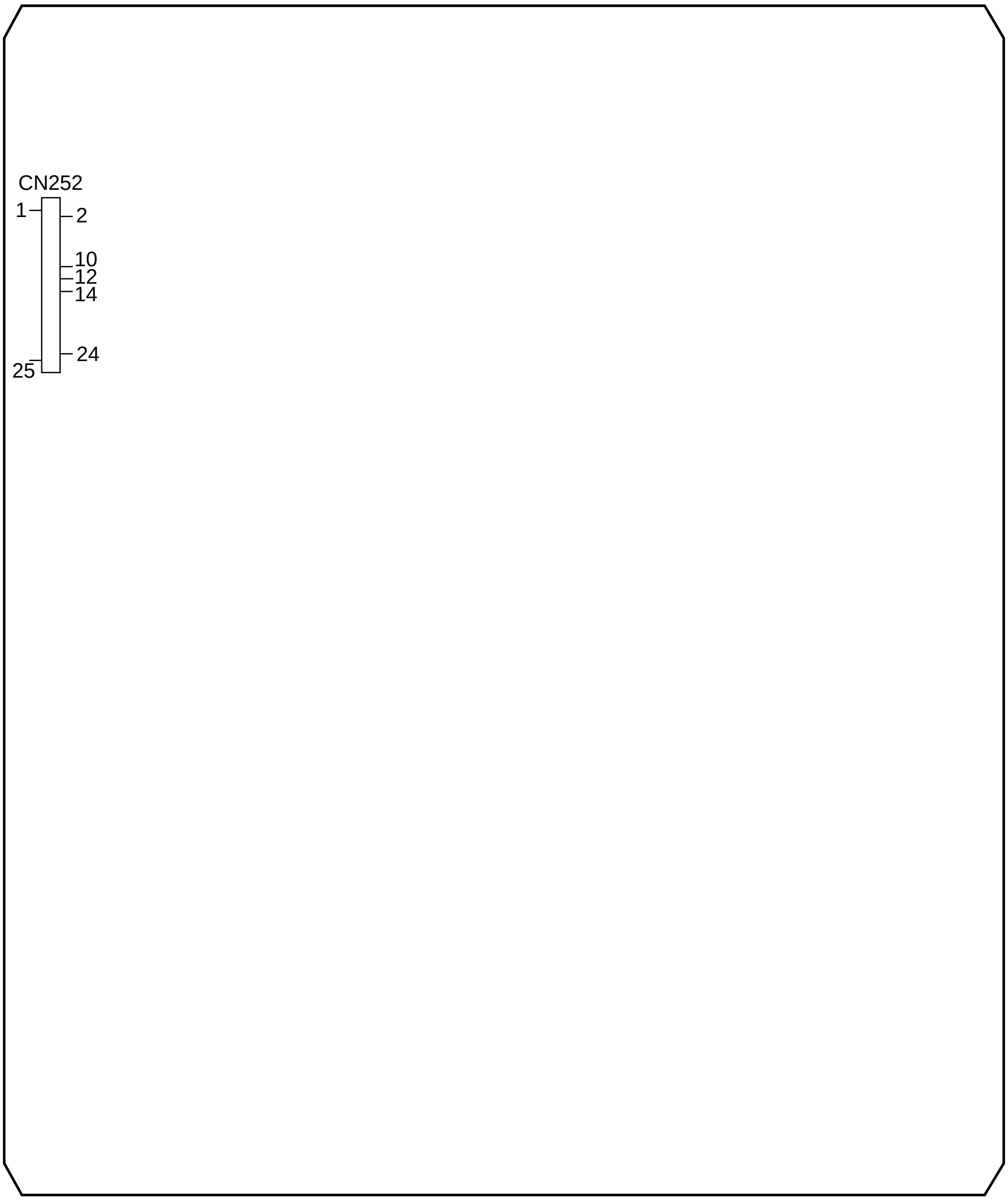

SECTION 8
REPAIR PARTS LIST

8-1. EXPLODED VIEWS

NOTE:
- -XX and -X mean standardized parts, so they may have some difference from the original one.
- Items marked "*" are not stocked since they are seldom required for routine service. Some delay should be anticipated when ordering these items.
- Color Indication of Appearance Parts
  Example:
  KNOB, BALANCE (WHITE) . . . (RED)
  ↑ ↑
  Parts Color Cabinet's Color
- The mechanical parts with no reference number in the exploded views are not supplied.
- Hardware (# mark) list and accessories and packing materials are given in the last of the electrical parts list.

The components identified by mark ⚠ or dotted line with mark ⚠ are critical for safety.
Replace only with part number specified.

8-1-1. CASE ASSEMBLY

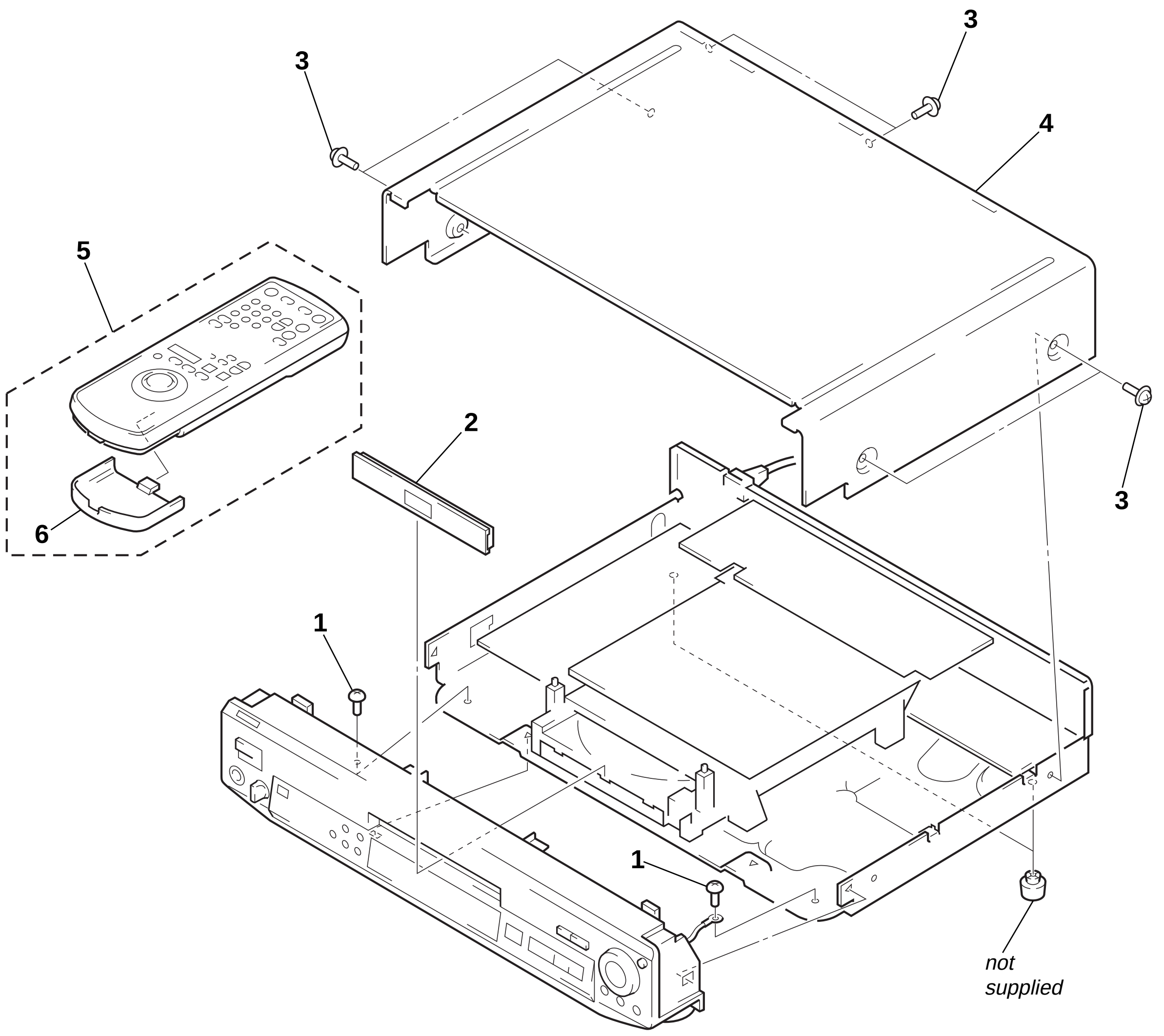

Ref. No.	Part No.	Description	Remark
1	3-970-608-11	SUMITITE (B3), +BV	
2	X-3948-369-1	PLATE ASSY, TRAY ORNAMENTAL	(S300/S315)
2	X-3948-382-1	PLATE ASSY, TRAY ORNAMENTAL	(S305: Taiwan, Chinese)
2	X-3948-384-1	PLATE ASSY, TRAY ORNAMENTAL	(S305: E, Singapore)
3	3-710-901-41	SCREW, TAPPING	(S300/S305: E, Singapore/S315)
3	3-710-901-51	SCREW, TAPPING (S305: Taiwan, Chinese)	
* 4	3-988-027-01	CASE (S300/S315)	
* 4	3-988-027-11	CASE (S305: E, Singapore)	
* 4	3-988-027-21	CASE (S305: Taiwan, Chinese)	
5	1-475-686-51	COMMANDER, STANDARD (RMT-D103E)	(S305)
5	1-475-688-11	COMMANDER, STANDARD (RMT-D105A)	(S300)
5	1-475-688-21	COMMANDER, STANDARD (RMT-D105P)	(S315)
6	3-709-044-01	LID, BATTERY CASE	(for RMT-D103E/D105A/D105P)

8-1-2. FRONT PANEL ASSEMBLY

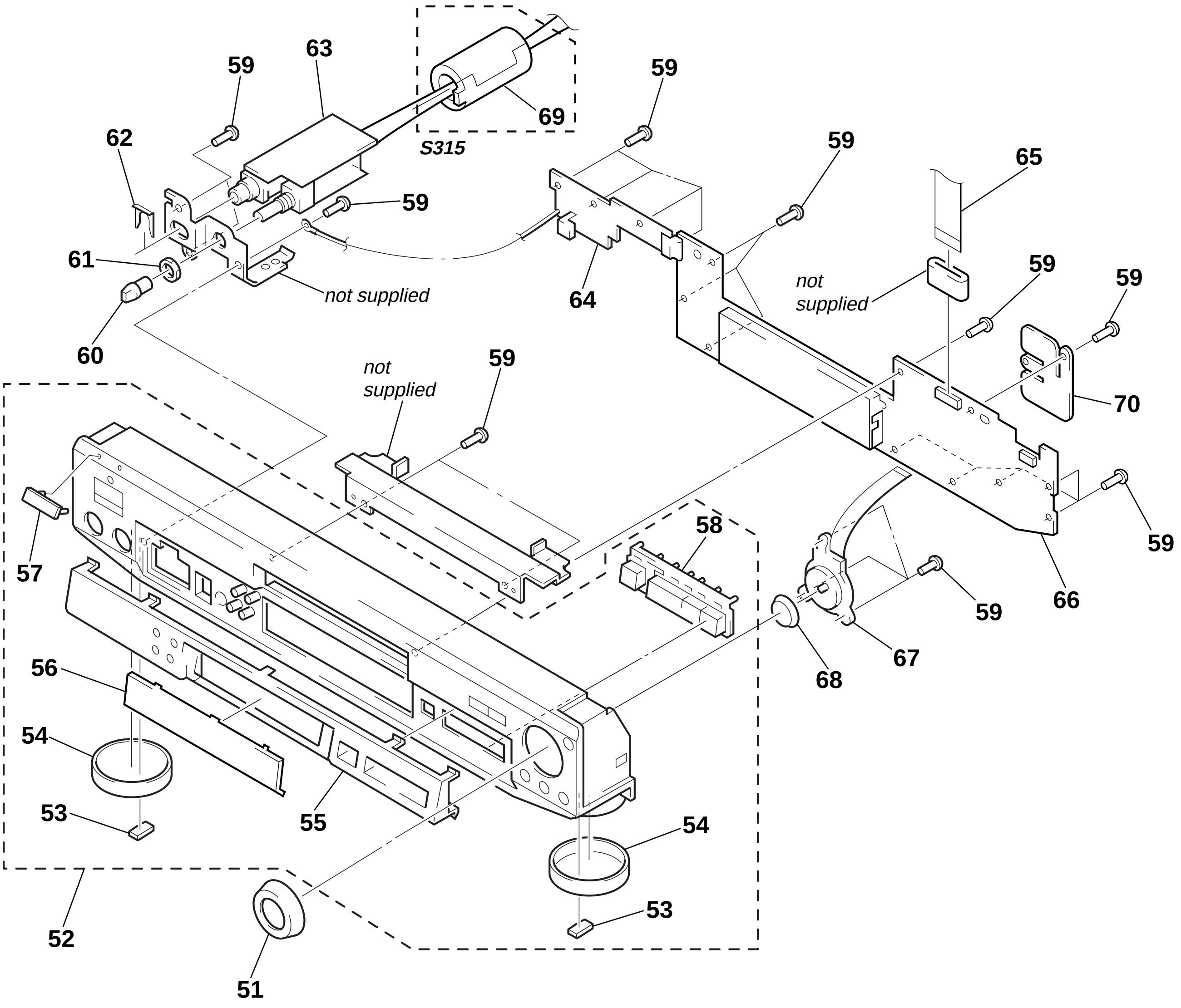

Ref. No.	Part No.	Description	Remark
51	3-988-015-01	RING, SHUTTLE (S300/S315)	
51	3-988-015-11	RING, SHUTTLE (S305: E, Singapore)	
51	3-988-015-21	RING, SHUTTLE (S305: Taiwan, Chinese)	
52	X-3948-380-1	PANEL ASSY, FRONT (S300)	
52	X-3948-381-1	PANEL ASSY, FRONT (S305: Taiwan, Chinese)	
52	X-3948-383-1	PANEL ASSY, FRONT (S305: E, Singapore)	
52	X-3948-426-1	PANEL ASSY, FRONT (S315)	
53	4-977-598-11	CUSHION	
54	4-981-435-01	RING (DIA. 50), ORNAMENTAL (S305)	
54	4-981-435-11	RING (DIA. 50), ORNAMENTAL (S315)	
54	4-981-435-21	RING (DIA. 50), ORNAMENTAL (S300)	
* 55	3-988-029-11	ESCUTCHEON, PANEL (S300/S315)	
* 55	3-988-029-21	ESCUTCHEON, PANEL (S305: Taiwan, Chinese)	
* 55	3-988-029-31	ESCUTCHEON, PANEL (S305: E, Singapore)	
56	3-988-036-01	WINDOW, INDICATION	
57	4-963-404-21	EMBLEM (5-A), SONY (S300/S305: E, Singapore/S315)	
57	4-963-404-81	EMBLEM (5-A), SONY (S305: Taiwan, Chinese)	
58	3-988-031-01	BUTTON, OPEN (S300/S315)	
58	3-988-031-11	BUTTON, OPEN (S305: E, Singapore)	
58	3-988-031-21	BUTTON, OPEN (S305: Taiwan, Chinese)	
59	4-951-620-01	SCREW (2.6X8), +BVTP	
60	3-945-284-51	KNOB, VOLUME (S300/S315)	
60	3-945-284-61	KNOB, VOLUME (S305: E, Singapore)	
60	3-945-284-71	KNOB, VOLUME (S305: Taiwan, Chinese)	
61	3-950-989-01	NUT (M7), HEXAGON	
* 62	3-684-436-01	PLATE, MOUNT	
* 63	A-6065-075-A	HP-96 BOARD, COMPLETE (S300)	
* 63	A-6065-097-A	ME-15 BOARD, COMPLETE (S305)	
* 63	A-6065-114-A	HP-96 BOARD, COMPLETE (S315)	
* 64	A-6065-074-A	FR-133 BOARD, COMPLETE	
65	1-783-345-11	CABLE, FLAT (FML-5) (20P)	
* 66	A-6065-112-A	FL-88 BOARD, COMPLETE	
67	1-475-685-11	ENCODER, ROTARY	
68	3-988-016-01	STICK, CURSOR (S300/S315)	
68	3-988-016-11	STICK, CURSOR (S305: E, Singapore)	
68	3-988-016-21	STICK, CURSOR (S305: Taiwan, Chinese)	
69	1-500-386-11	FILTER, CLAMP (FERRITE CORE) (S315)	
70	3-989-677-01	HOLDER	

8-1-3. CHASSIS ASSEMBLY

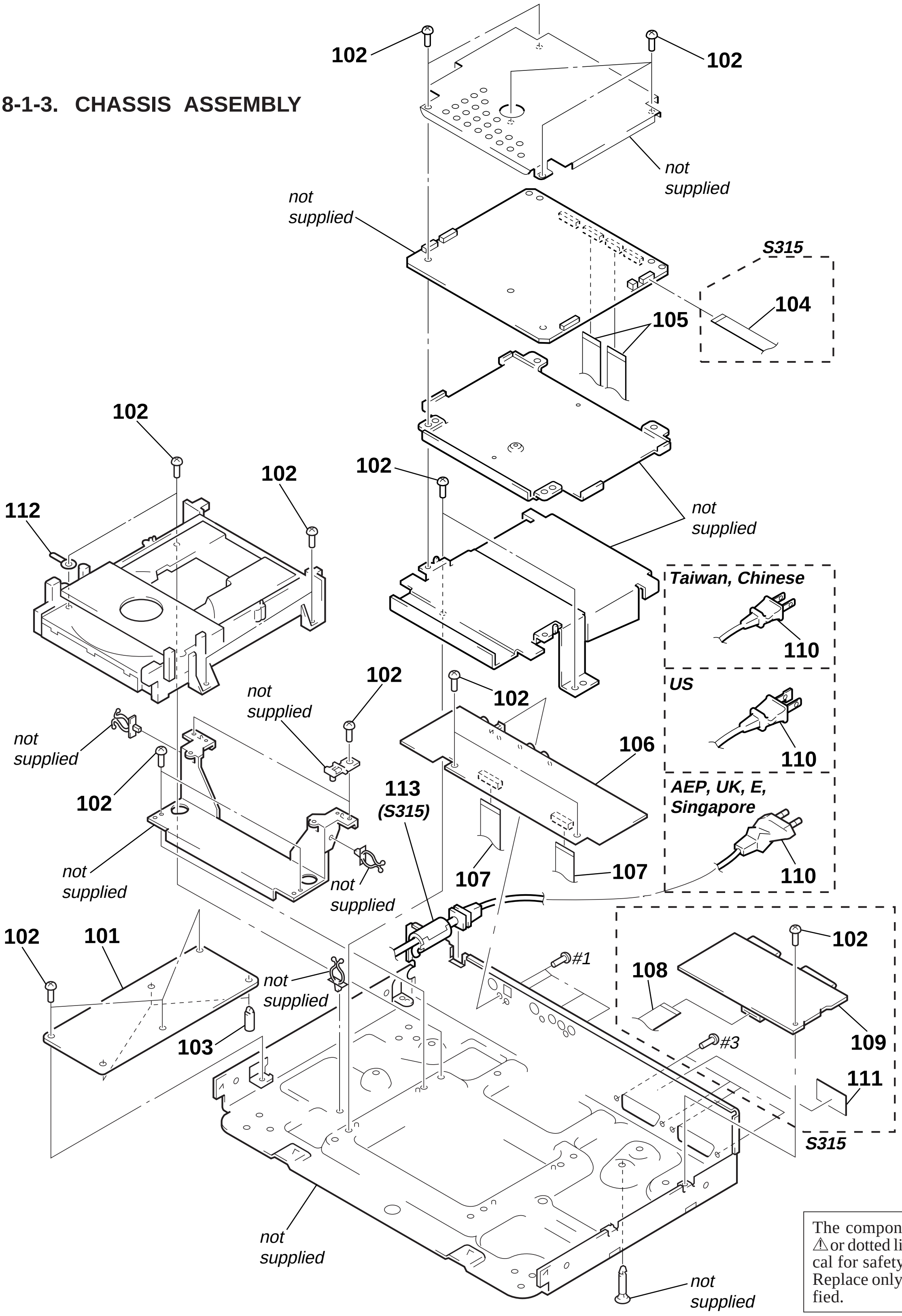

The components identified by mark ⚠ or dotted line with mark ⚠ are critical for safety.
Replace only with part number specified.

Ref. No.	Part No.	Description	Remark
* 101	1-468-287-12	POWER BLOCK (HS-930SU) (S300: US)	
* 101	1-468-287-21	POWER BLOCK (HS-930SH) (S315/S305: Chinese, Singapore)	
* 101	1-468-287-31	POWER BLOCK (HS-930SF) (S300: E/S305: Taiwan, E)	
102	3-970-608-11	SUMITITE (B3), +BV	
* 103	3-691-950-01	SPACER, P.C.BOARD	
104	1-783-348-11	CABLE, FLAT (FME-3) (9P) (S315)	
105	1-783-339-11	CABLE, FLAT (FMT-21) (27P)	
* 106	A-6065-089-A	AU-197 BOARD, COMPLETE (S300: US)	
* 106	A-6065-096-A	AU-197 BOARD, COMPLETE (S305)	
* 106	A-6065-106-A	AU-197 BOARD, COMPLETE (S315)	
* 106	A-6065-092-A	AU-197 BOARD, COMPLETE (S300: E)	
107	1-783-343-11	CABLE, FLAT (FMA-4) (25P)	
108	1-783-353-11	CABLE, FLAT (FEA-2) (15P) (S315)	
* 109	A-6065-108-A	ER-2 BOARD, COMPLETE (S315)	
⚠110	1-777-850-51	CORD, POWER (US)	
⚠110	1-777-851-41	CORD, POWER (E, Singapore)	
⚠110	1-782-001-61	CORD, POWER (AEP, UK)	
⚠110	1-782-692-31	CORD, POWER (Chinese)	
⚠110	1-777-985-51	CORD, POWER (Taiwan)	
* 111	3-490-052-01	LABEL, LASER CLASS (1) (S315)	
* 112	3-703-150-11	CLAMP	
113	1-500-386-11	FILTER, CLAMP (FERRITE CORE) (S315)	

8-1-4. DVD MECHANISM CHASSIS ASSEMBLY (1)

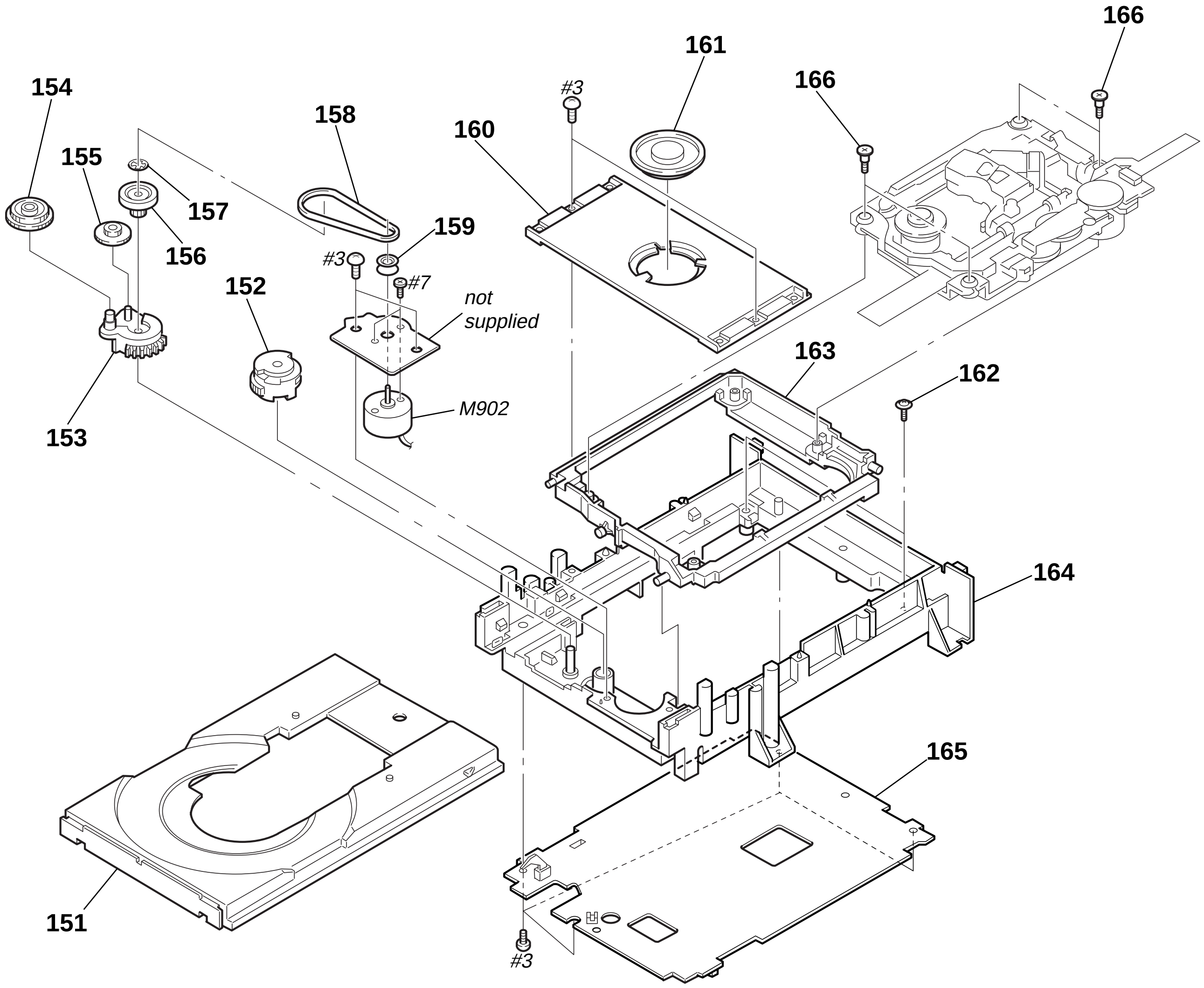

Ref. No.	Part No.	Description	Remark
151	3-975-090-01	TRAY	
152	3-975-073-02	GEAR, CAM	
153	3-975-087-01	GEAR, DRIVE	
154	3-975-086-01	GEAR, TRAY DRIVING	
155	3-975-072-01	GEAR, LOADING (MIDWAY)	
156	3-975-071-01	PULLEY, LOADING	
157	3-669-596-00	WASHER (2.3), STOPPER	
158	3-975-070-01	BELT	
159	3-975-085-01	PULLEY, MOTOR	
160	3-975-089-01	BRACKET, PRESS PULLEY	
* 161	3-975-074-01	PULLEY, PRESS	
162	3-975-077-01	SCREW, BU STOPPER	
* 163	3-975-088-01	HOLDER, BASE UNIT	
* 164	X-3948-398-1	HOLDER ASSY, MD	
* 165	A-6065-077-A	TK-47 BOARD, COMPLETE	
166	4-981-923-01	SCREW (M), STEP	
M902	1-698-942-21	MOTOR (LOADING)	

8-1-5. DVD MECHANISM CHASSIS ASSEMBLY (2)

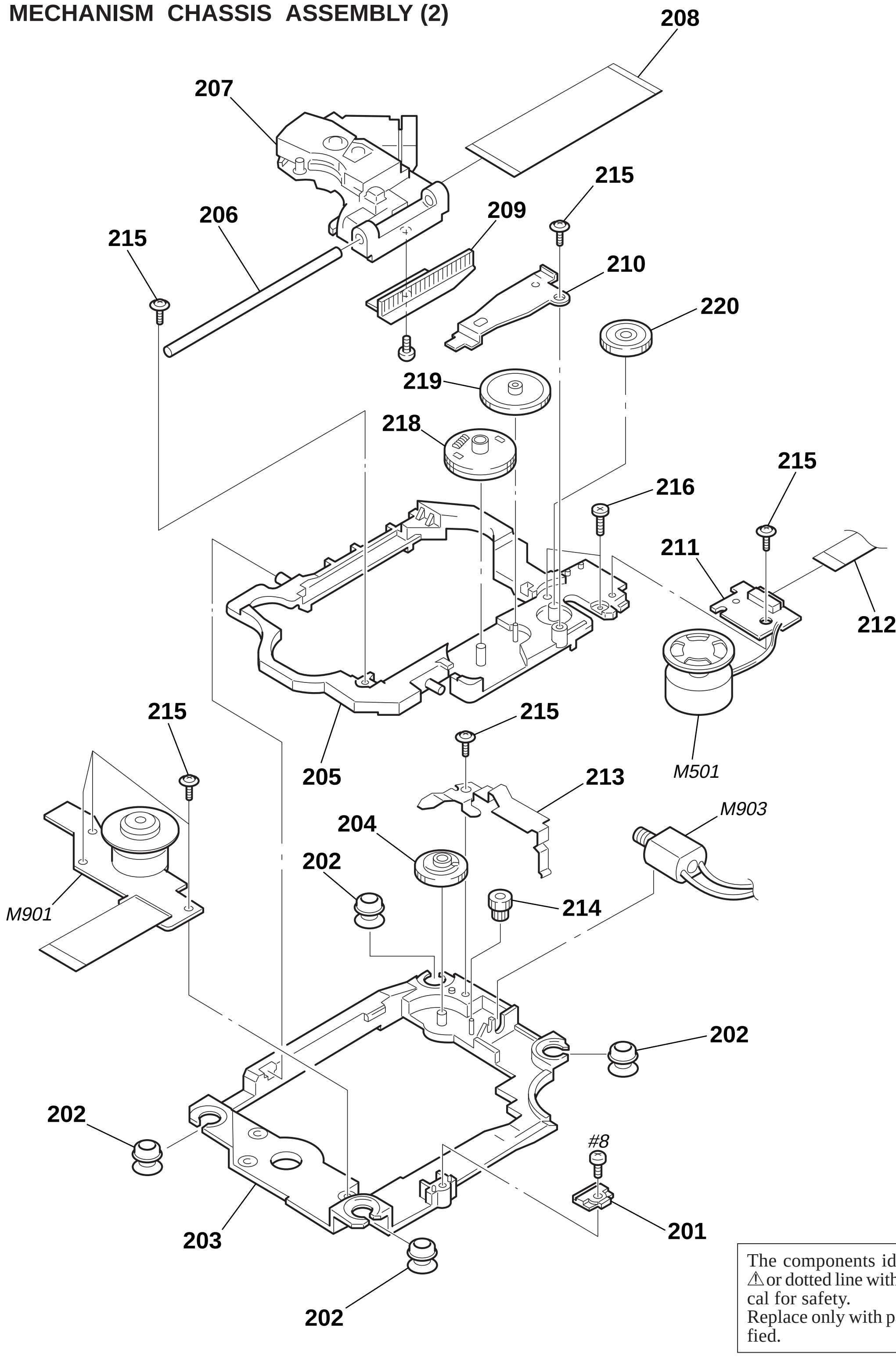

The components identified by mark ⚠ or dotted line with mark ⚠ are critical for safety.
Replace only with part number specified.

Ref. No.	Part No.	Description	Remark
* 201	3-975-066-01	STOPPER, SKEW SHAFT	
* 202	3-975-061-01	INSULATOR	
* 203	3-975-056-01	BASE, SPINDLE	
204	3-975-058-01	CAM, SKEW	
* 205	3-975-063-01	BASE, SLIDE	
* 206	3-975-065-01	SHAFT, MAIN	
⚠ 207	8-820-005-02	OPTICAL PICK-UP KHS-180A/J1N	
208	1-665-390-11	OP-15 FLEXIBLE BOARD	
209	3-975-067-01	GEAR, RACK	
* 210	3-975-064-01	RETAINER, SLED GEAR	
* 211	A-6065-078-A	FG-43 BOARD, COMPLETE	

Ref. No.	Part No.	Description	Remark
212	1-783-341-11	CABLE, FLAT (FMF-28) (8P)	
* 213	3-975-059-01	RETAINER, SKEW GEAR	
214	3-975-057-01	GEAR, SKEW	
215	4-974-711-01	SCREW (2X5) (P TYIGHT), (+) PTTWH	
216	4-974-725-01	SCREW (M1.7X2.5), P	
218	A-4683-008-A	GEAR ASSY, LIMITTER	
219	4-974-720-01	GEAR (S-B)	
220	4-974-726-01	GEAR (S-A)	
M501	X-3947-137-1	MOTOR ASSY, SLED	
M901	1-698-944-11	MOTOR, DC (SPINDLE)	
M903	X-3947-138-1	MOTOR ASSY, SKEW	

AU-197

8-2. ELECTRICAL PARTS LIST

NOTE:
- Due to standardization, replacements in the parts list may be different from the parts specified in the diagrams or the components used on the set.
- -XX and -X mean standardized parts, so they may have some difference from the original one.
- RESISTORS
  All resistors are in ohms.
  METAL: Metal-film resistor.
  METAL OXIDE: Metal oxide-film resistor.
  F: nonflammable
- Items marked "*" are not stocked since they are seldom required for routine service.
  Some delay should be anticipated when ordering these items.
- SEMICONDUCTORS
  In each case, u: μ, for example:
  uA. . : μA. . uPA. . : μPA. .
  uPB. . : μPB. . uPC. . : μPC. .
  uPD. . : μPD. .
- CAPACITORS
  uF: μF
- COILS
  uH: μH

The components identified by mark ⚠ or dotted line with mark ⚠ are critical for safety.
Replace only with part number specified.

When indicating parts by reference number, please include the board.

Ref. No.	Part No.	Description				Remark
*	A-6065-092-A	AU-197 BOARD, COMPLETE (S300: E)				
*	A-6065-089-A	AU-197 BOARD, COMPLETE (S300: US)				
*	A-6065-096-A	AU-197 BOARD, COMPLETE (S305)				
*	A-6065-106-A	AU-197 BOARD, COMPLETE (S315)				
		************************				
						(Ref.No.2,000 Series)
	4-352-844-01	PIN, LEAD, COATING				
		< CAPACITOR >				
C202	1-124-910-11	ELECT	47uF	20%	50V	(S300/S305)
C202	1-126-023-11	ELECT	100uF	20%	25V	(S315)
C203	1-124-910-11	ELECT	47uF	20%	50V	(S300/S305)
C203	1-126-023-11	ELECT	100uF	20%	25V	(S315)
C204	1-124-910-11	ELECT	47uF	20%	50V	(S300/S305)
C204	1-124-724-11	ELECT	47uF	20%	50V	(S315)
C205	1-124-910-11	ELECT	47uF	20%	50V	(S300/S305)
C205	1-124-724-11	ELECT	47uF	20%	50V	(S315)
C216	1-164-232-11	CERAMIC CHIP	0.01uF		50V	
C217	1-164-232-11	CERAMIC CHIP	0.01uF		50V	
C224	1-130-484-00	MYLAR	0.012uF	5%	50V	
C225	1-130-484-00	MYLAR	0.012uF	5%	50V	
C232	1-136-850-11	FILM	0.1uF	5%	63V	
C233	1-164-232-11	CERAMIC CHIP	0.01uF		50V	
C234	1-130-467-00	MYLAR	470PF	5%	50V	
C235	1-126-926-11	ELECT	1000uF	20%	10V	
C236	1-130-467-00	MYLAR	470PF	5%	50V	
C239	1-126-967-11	ELECT	47uF	20%	16V	(S300/S305)
C239	1-124-910-11	ELECT	47uF	20%	50V	(S315)
C240	1-126-967-11	ELECT	47uF	20%	16V	(S300/S305)
C240	1-124-910-11	ELECT	47uF	20%	50V	(S315)
C245	1-126-964-11	ELECT	10uF	20%	50V	
C264	1-164-232-11	CERAMIC CHIP	0.01uF		50V	(S300/S305)
C269	1-164-232-11	CERAMIC CHIP	0.01uF		50V	(S300/S305)
C286	1-136-850-11	FILM	0.1uF	5%	63V	
C287	1-136-850-11	FILM	0.1uF	5%	63V	
C290	1-117-793-11	MYLAR	330PF	5%	50V	
C291	1-117-793-11	MYLAR	330PF	5%	50V	
C298	1-164-232-11	CERAMIC CHIP	0.01uF		50V	
C299	1-126-967-11	ELECT	47uF	20%	16V	
C300	1-164-232-11	CERAMIC CHIP	0.01uF		50V	
C301	1-126-964-11	ELECT	10uF	20%	50V	
C302	1-126-335-11	ELECT	220uF	20%	10V	
C303	1-163-243-11	CERAMIC CHIP	47PF	5%	50V	(S300/S305)
C303	1-163-227-11	CERAMIC CHIP	10PF	0.5PF	50V	(S315)
C304	1-163-243-11	CERAMIC CHIP	47PF	5%	50V	(S300/S305)
C304	1-163-227-11	CERAMIC CHIP	10PF	0.5PF	50V	(S315)
C305	1-163-243-11	CERAMIC CHIP	47PF	5%	50V	(S300/S305)
C305	1-163-227-11	CERAMIC CHIP	10PF	0.5PF	50V	(S315)
C306	1-163-231-11	CERAMIC CHIP	15PF	5%	50V	
C312	1-164-004-11	CERAMIC CHIP	0.1uF	10%	25V	
C313	1-164-004-11	CERAMIC CHIP	0.1uF	10%	25V	
C341	1-164-004-11	CERAMIC CHIP	0.1uF	10%	25V	
C342	1-126-935-11	ELECT	470uF	20%	6.3V	
C351	1-126-933-11	ELECT	100uF	20%	10V	
C352	1-126-933-11	ELECT	100uF	20%	10V	
C353	1-126-925-11	ELECT	470uF	20%	10V	
C354	1-126-925-11	ELECT	470uF	20%	10V	
C355	1-164-004-11	CERAMIC CHIP	0.1uF	10%	25V	
C356	1-126-967-11	ELECT	47uF	20%	16V	
C357	1-164-004-11	CERAMIC CHIP	0.1uF	10%	25V	
C365	1-163-259-91	CERAMIC CHIP	220PF	5%	50V	
C367	1-163-009-11	CERAMIC CHIP	0.001uF	10%	50V	(S300: US)
C372	1-136-850-11	FILM	0.1uF	5%	63V	
C374	1-126-967-11	ELECT	47uF	20%	16V	
		< CONNECTOR >				
CN201	1-774-769-11	CONNECTOR, FFC/FPC 25P				

Ref. No.	Part No.	Description	Remark
CN202	1-569-932-31	CONNECTOR, FFC/FPC 15P (S315)	
CN203	1-774-769-11	CONNECTOR, FFC/FPC 25P	
CN205	1-573-733-11	PIN, CONNECTOR 6P (S300)	
CN205	1-573-733-21	PIN, CONNECTOR 6P (S315)	
CN206	1-506-484-11	PIN, CONNECTOR 5P (S305)	
		< DIODE >	
D201	8-719-988-62	DIODE 1SS355	
D202	8-719-988-62	DIODE 1SS355	
D352	8-719-067-40	DIODE STZ6.8N-T146 (S300US)	
D354	8-719-016-73	DIODE STZ6.8TT146	
D356	8-719-016-73	DIODE STZ6.8TT146	
D358	8-719-016-73	DIODE STZ6.8TT146	
D361	8-719-016-73	DIODE STZ6.8TT146	
D362	8-719-975-40	DIODE RB411D	
D363	8-719-975-40	DIODE RB411D	
		< FERRITE BEAD >	
FB201	1-414-553-11	INDUCTOR 0UH	
FB202	1-414-553-11	INDUCTOR 0UH	
FB209	1-414-135-11	INDUCTOR CHIP 0UH (S300/S315)	
FB210	1-414-135-11	INDUCTOR CHIP 0UH (S300/S315)	
FB211	1-414-135-11	INDUCTOR CHIP 0UH (S300/S315)	
FB212	1-414-135-11	INDUCTOR CHIP 0UH (S305)	
FB213	1-414-135-11	INDUCTOR CHIP 0UH (S300/S315)	
FB214	1-414-135-11	INDUCTOR CHIP 0UH (S300/S315)	
FB215	1-414-135-11	INDUCTOR CHIP 0UH (S300/S315)	
FB216	1-414-135-11	INDUCTOR CHIP 0UH (S305)	
FB217	1-414-135-11	INDUCTOR CHIP 0UH (S305)	
FB218	1-414-135-11	INDUCTOR CHIP 0UH (S305)	
FB251	1-414-135-11	FERRITE 0UH (S315)	
FB252	1-414-135-11	FERRITE 0UH (S315)	
FB351	1-414-553-11	INDUCTOR 0UH (S300: US)	
FB352	1-414-553-11	INDUCTOR 0UH	
FB353	1-414-553-11	INDUCTOR 0UH	
FB354	1-414-553-11	INDUCTOR 0UH	
FB355	1-414-553-11	INDUCTOR 0UH	
FB356	1-414-553-11	INDUCTOR 0UH	
FB357	1-414-553-11	INDUCTOR 0UH	
FB358	1-414-553-11	INDUCTOR 0UH	
FB359	1-414-553-11	INDUCTOR 0UH (S300: US)	
		< IC >	
IC201	8-759-522-17	IC NJM79M09DLA(TE1)	
IC202	8-759-284-66	IC NJM78M08DLA(TE1)	
IC206	8-759-422-21	IC NJM4580V(TE2)	
IC207	8-759-422-21	IC NJM4580V(TE2)	
IC214	8-759-422-21	IC NJM4580V(TE2) (S300/S315)	
IC215	8-759-526-70	IC CXD8750N-T2	
IC217	8-759-324-03	IC HA17431UA-TL	
IC351	8-759-522-11	IC BA7660FS-E2	
IC352	8-749-921-12	IC GP1F32T (DIGITAL OUT OPTICAL)	
		< JACK >	
J352	1-764-188-21	JACK (SMALL TYPE) (DIA. 3.5) (S-LINK)	(S300: US)
J353	1-779-382-11	JACK, PIN 1P (DIGITAL OUT COAXIAL)	
J354	1-694-409-41	TERMINAL BOARD (LINE OUT) (S300/S305)	
J354	1-694-408-41	TERMINAL BOARD (LINE OUT) (S315)	

Ref. No.	Part No.	Description	Remark
		< COIL >	
L351	1-414-930-21	INDUCTOR 2.2uH	
L352	1-414-930-21	INDUCTOR 2.2uH	
L354	1-414-926-21	INDUCTOR 0.47uH	
L355	1-412-951-11	INDUCTOR 10uH	
L356	1-412-951-11	INDUCTOR 10uH	
L357	1-412-951-11	INDUCTOR 10uH	
		< TRANSISTOR >	
Q201	8-729-424-08	TRANSISTOR UN2111 (S300/S315)	
Q202	8-729-216-22	TRANSISTOR 2SA1162	
Q205	8-729-023-22	TRANSISTOR 2SD2114KT146	
Q206	8-729-023-22	TRANSISTOR 2SD2114KT146	
Q214	8-729-140-55	TRANSISTOR 2SK739	
Q351	8-729-424-08	TRANSISTOR UN2111	
Q352	8-729-421-19	TRANSISTOR UN2213	
Q353	8-729-120-28	TRANSISTOR 2SC1623-L5L6	
		< RESISTOR >	
R154	1-216-864-11	METAL CHIP 0 5% 1/16W	(S300: US)
R201	1-216-033-00	METAL CHIP 220 5% 1/10W	
R202	1-208-798-11	RES, CHIP 4.7K 0.50% 1/10W	
R206	1-216-109-00	METAL CHIP 330K 5% 1/10W	
R207	1-216-109-00	METAL CHIP 330K 5% 1/10W	
R208	1-216-069-00	METAL CHIP 6.8K 5% 1/10W	
R209	1-216-069-00	METAL CHIP 6.8K 5% 1/10W	
R213	1-216-071-00	METAL CHIP 8.2K 5% 1/10W	
R217	1-216-077-00	METAL CHIP 15K 5% 1/10W	(S305)
R218	1-216-071-00	METAL CHIP 8.2K 5% 1/10W	
R219	1-216-077-00	METAL CHIP 15K 5% 1/10W	(S305)
R222	1-208-804-11	RES, CHIP 8.2K 0.50% 1/10W	
R223	1-216-047-91	RES, CHIP 820 5% 1/10W	
R224	1-216-047-91	RES, CHIP 820 5% 1/10W	
R225	1-216-025-91	RES, CHIP 100 5% 1/10W	
R226	1-216-053-00	METAL CHIP 1.5K 5% 1/10W	
R227	1-216-045-00	METAL CHIP 680 5% 1/10W	
R228	1-216-045-00	METAL CHIP 680 5% 1/10W	
R229	1-216-053-00	METAL CHIP 1.5K 5% 1/10W	
R231	1-216-073-00	METAL CHIP 10K 5% 1/10W	
R232	1-216-073-00	METAL CHIP 10K 5% 1/10W	(S300/S315)
R235	1-216-109-00	METAL CHIP 330K 5% 1/10W	
R236	1-216-109-00	METAL CHIP 330K 5% 1/10W	
R241	1-216-041-00	METAL CHIP 470 5% 1/10W	
R242	1-216-041-00	METAL CHIP 470 5% 1/10W	
R249	1-216-073-00	METAL CHIP 10K 5% 1/10W	
R250	1-216-097-91	RES, CHIP 100K 5% 1/10W	
R254	1-208-805-11	RES, CHIP 9.1K 0.50% 1/10W	
R262	1-216-296-91	SHORT 0	
R269	1-216-097-91	RES, CHIP 100K 5% 1/10W	
R270	1-216-049-91	RES, CHIP 1K 5% 1/10W	
R271	1-216-049-91	RES, CHIP 1K 5% 1/10W	
R284	1-216-025-91	RES, CHIP 100 5% 1/10W	(S300/S315)
R285	1-216-025-91	RES, CHIP 100 5% 1/10W	(S300/S315)
R298	1-216-025-91	RES, CHIP 100 5% 1/10W	(S300/S315)

Ref. No.	Part No.	Description			Remark
R305	1-216-025-91	RES, CHIP	100	5%	1/10W
					(S300/S315)
R314	1-216-041-00	METAL CHIP	470	5%	1/10W
					(S305)
R315	1-216-041-00	METAL CHIP	470	5%	1/10W
					(S305)
R315	1-216-009-00	METAL CHIP	22	5%	1/10W
					(S315)
R316	1-216-041-00	METAL CHIP	470	5%	1/10W
					(S305)
R317	1-216-041-00	METAL CHIP	470	5%	1/10W
					(S305)
R317	1-216-009-00	METAL CHIP	22	5%	1/10W
					(S315)
R318	1-216-025-91	RES, CHIP	100	5%	1/10W
R319	1-216-025-91	RES, CHIP	100	5%	1/10W
R320	1-216-025-91	RES, CHIP	100	5%	1/10W
R326	1-216-295-91	SHORT	0		
R332	1-216-025-91	RES, CHIP	100	5%	1/10W
R333	1-216-049-91	RES, CHIP	1K	5%	1/10W
R333	1-216-817-11	METAL CHIP	470	5%	1/16W
			(S300: US/S305: E, Singapore)		
R334	1-216-295-91	SHORT	0		
R335	1-216-295-91	SHORT	0		
R336	1-216-295-91	SHORT	0		
R337	1-216-295-91	SHORT	0		
R338	1-216-295-91	SHORT	0		
R339	1-216-295-91	SHORT	0		
R350	1-216-057-00	METAL CHIP	2.2K	5%	1/10W
R351	1-216-021-00	METAL CHIP	68	5%	1/10W
R352	1-216-021-00	METAL CHIP	68	5%	1/10W
R353	1-216-021-00	METAL CHIP	68	5%	1/10W
R354	1-216-021-00	METAL CHIP	68	5%	1/10W
R355	1-216-021-00	METAL CHIP	68	5%	1/10W
R356	1-216-021-00	METAL CHIP	68	5%	1/10W
R357	1-216-057-00	METAL CHIP	2.2K	5%	1/10W
R358	1-216-073-00	METAL CHIP	10K	5%	1/10W
R359	1-216-057-00	METAL CHIP	2.2K	5%	1/10W
R360	1-216-073-00	METAL CHIP	10K	5%	1/10W
R361	1-216-295-91	SHORT	0		
R362	1-216-295-91	SHORT	0		
R363	1-216-033-00	METAL CHIP	220	5%	1/10W
R364	1-216-021-00	METAL CHIP	68	5%	1/10W
R365	1-216-295-91	SHORT	0		
R366	1-216-295-91	SHORT	0		
R367	1-216-295-91	SHORT	0		
R368	1-216-049-91	RES, CHIP	1K	5%	1/10W
					(S300: US)
R369	1-216-025-91	RES, CHIP	100	5%	1/10W
R370	1-216-295-91	SHORT	0		
R373	1-216-037-00	METAL CHIP	330	5%	1/10W
R374	1-216-037-00	METAL CHIP	330	5%	1/10W
R375	1-216-037-00	METAL CHIP	330	5%	1/10W
R376	1-216-017-91	RES, CHIP	47	5%	1/10W
R377	1-216-017-91	RES, CHIP	47	5%	1/10W
R378	1-216-017-91	RES, CHIP	47	5%	1/10W
R379	1-216-017-91	RES, CHIP	47	5%	1/10W
R380	1-216-017-91	RES, CHIP	47	5%	1/10W
R381	1-216-017-91	RES, CHIP	47	5%	1/10W
R382	1-216-017-91	RES, CHIP	47	5%	1/10W
R383	1-216-017-91	RES, CHIP	47	5%	1/10W

Ref. No.	Part No.	Description			Remark
R384	1-216-295-91	SHORT	0		
R385	1-216-295-91	SHORT	0		
R386	1-216-295-91	SHORT	0	(S315)	

* A-6065-108-A ER-2 BOARD, COMPLETE (S315)
****

(Ref.No.2,000 Series)

< CAPACITOR >

Ref. No.	Part No.	Description			Remark
C601	1-164-232-11	CERAMIC CHIP	0.01uF		50V
C602	1-128-551-11	ELECT	22uF	20%	25V
C603	1-126-967-11	ELECT	47uF	20%	16V
C604	1-126-967-11	ELECT	47uF	20%	16V
C605	1-164-232-11	CERAMIC CHIP	0.01uF		50V
C606	1-164-232-11	CERAMIC CHIP	0.01uF		50V
C607	1-126-967-11	ELECT	47uF	20%	16V
C608	1-126-967-11	ELECT	47uF	20%	16V
C609	1-164-004-11	CERAMIC CHIP	0.1uF	10%	25V
C610	1-164-004-11	CERAMIC CHIP	0.1uF	10%	25V
C611	1-164-232-11	CERAMIC CHIP	0.01uF		50V
C612	1-164-004-11	CERAMIC CHIP	0.1uF	10%	25V
C613	1-164-004-11	CERAMIC CHIP	0.1uF	10%	25V
C614	1-126-967-11	ELECT	47uF	20%	16V
C615	1-164-232-11	CERAMIC CHIP	0.01uF		50V
C616	1-164-232-11	CERAMIC CHIP	0.01uF		50V
C619	1-126-967-11	ELECT	47uF	20%	16V
C620	1-128-551-11	ELECT	22uF	20%	25V
C622	1-128-551-11	ELECT	22uF	20%	25V
C623	1-126-967-11	ELECT	47uF	20%	16V
C624	1-126-967-11	ELECT	47uF	20%	16V
C625	1-128-551-11	ELECT	22uF	20%	25V
C626	1-128-551-11	ELECT	22uF	20%	25V
C629	1-126-967-11	ELECT	47uF	20%	16V
C630	1-126-967-11	ELECT	47uF	20%	16V
C631	1-164-004-11	CERAMIC CHIP	0.1uF	10%	25V
C632	1-164-004-11	CERAMIC CHIP	0.1uF	10%	25V
C633	1-164-004-11	CERAMIC CHIP	0.1uF	10%	25V
C634	1-164-004-11	CERAMIC CHIP	0.1uF	10%	25V
C637	1-164-232-11	CERAMIC CHIP	0.01uF		50V
C638	1-126-967-11	ELECT	47uF	20%	16V
C639	1-126-967-11	ELECT	47uF	20%	16V
C640	1-164-232-11	CERAMIC CHIP	0.01uF		50V
C641	1-164-232-11	CERAMIC CHIP	0.01uF		50V
C642	1-128-551-11	ELECT	22uF	20%	25V
C645	1-126-933-11	ELECT	100uF	20%	10V
C646	1-128-551-11	ELECT	22uF	20%	25V
C647	1-126-933-11	ELECT	100uF	20%	10V
C648	1-128-551-11	ELECT	22uF	20%	25V
C649	1-126-933-11	ELECT	100uF	20%	10V
C650	1-128-551-11	ELECT	22uF	20%	25V
C651	1-164-232-11	CERAMIC CHIP	0.01uF		50V
C652	1-126-967-11	ELECT	47uF	20%	16V
C664	1-163-133-00	CERAMIC CHIP	470PF	5%	50V
C665	1-163-133-00	CERAMIC CHIP	470PF	5%	50V
C666	1-163-133-00	CERAMIC CHIP	470PF	5%	50V
C667	1-163-133-00	CERAMIC CHIP	470PF	5%	50V
C668	1-163-133-00	CERAMIC CHIP	470PF	5%	50V
C669	1-163-133-00	CERAMIC CHIP	470PF	5%	50V
C670	1-163-133-00	CERAMIC CHIP	470PF	5%	50V
C671	1-163-133-00	CERAMIC CHIP	470PF	5%	50V

Ref. No.	Part No.	Description			Remark
C675	1-163-251-11	CERAMIC CHIP	100PF	5%	50V
C676	1-163-251-11	CERAMIC CHIP	100PF	5%	50V
C686	1-163-251-11	CERAMIC CHIP	100PF	5%	50V
C687	1-163-251-11	CERAMIC CHIP	100PF	5%	50V
C694	1-163-009-11	CERAMIC CHIP	0.001uF	10%	50V
C695	1-163-009-11	CERAMIC CHIP	0.001uF	10%	50V
C696	1-128-551-11	ELECT	22uF	20%	25V
C697	1-126-933-11	ELECT	100uF	20%	10V
C698	1-128-551-11	ELECT	22uF	20%	25V
C699	1-126-933-11	ELECT	100uF	20%	10V
C700	1-126-967-11	ELECT	47uF	20%	16V
C701	1-164-232-11	CERAMIC CHIP	0.01uF		50V
		< CONNECTOR >			
CN601	1-506-482-11	PIN, CONNECTOR 3P			
CN602	1-779-647-41	CONNECTOR, FFC/FPC 15P			
CN603	1-779-934-11	CONNECTOR, FFC/FPC 9P			
		< JACK >			
CNJ601	1-568-016-51	SOCKET, PIN 21P (EURO AV2)			
CNJ602	1-568-016-51	SOCKET, PIN 21P (EURO AV1)			
		< DIODE >			
D601	8-719-404-49	DIODE MA111			
D602	8-719-067-40	DIODE STZ6.8N-T146			
D603	8-719-067-40	DIODE STZ6.8N-T146			
D604	8-719-067-40	DIODE STZ6.8N-T146			
D605	8-719-067-40	DIODE STZ6.8N-T146			
D606	8-719-067-40	DIODE STZ6.8N-T146			
D607	8-719-067-40	DIODE STZ6.8N-T146			
D608	8-719-067-40	DIODE STZ6.8N-T146			
D609	8-719-067-40	DIODE STZ6.8N-T146			
D610	8-719-067-40	DIODE STZ6.8N-T146			
D611	8-719-067-40	DIODE STZ6.8N-T146			
D612	8-719-067-40	DIODE STZ6.8N-T146			
D613	8-719-067-40	DIODE STZ6.8N-T146			
D614	8-719-067-40	DIODE STZ6.8N-T146			
D615	8-719-067-40	DIODE STZ6.8N-T146			
D616	8-719-067-40	DIODE STZ6.8N-T146			
D617	8-719-067-40	DIODE STZ6.8N-T146			
D618	8-719-067-40	DIODE STZ6.8N-T146			
D619	8-719-067-40	DIODE STZ6.8N-T146			
D620	8-719-105-99	DIODE RD6.2M-B1			
D621	8-719-977-40	DIODE UDZ-TE-17-13B			
D622	8-719-105-99	DIODE RD6.2M-B1			
D623	8-719-977-40	DIODE UDZ-TE-17-13B			
D624	8-719-105-99	DIODE RD6.2M-B1			
D625	8-719-404-49	DIODE MA111			
D626	8-719-404-49	DIODE MA111			
D627	8-719-404-49	DIODE MA111			
D628	8-719-404-49	DIODE MA111			
D631	8-719-404-49	DIODE MA111			
D632	8-719-404-49	DIODE MA111			
		< FERRITE BEAD >			
FB602	1-414-135-11	FERRITE	0UH		
FB603	1-414-135-11	FERRITE	0UH		
FB717	1-414-553-11	FERRITE	0UH		
FB718	1-414-553-11	FERRITE	0UH		
FB719	1-414-553-11	FERRITE	0UH		

Ref. No.	Part No.	Description		Remark
FB720	1-414-553-11	FERRITE	0UH	
FB721	1-414-553-11	FERRITE	0UH	
FB722	1-414-553-11	FERRITE	0UH	
FB723	1-414-553-11	FERRITE	0UH	
FB724	1-414-553-11	FERRITE	0UH	
FB725	1-414-553-11	FERRITE	0UH	
FB726	1-414-553-11	FERRITE	0UH	
FB727	1-414-553-11	FERRITE	0UH	
FB728	1-414-553-11	FERRITE	0UH	
FB729	1-414-553-11	FERRITE	0UH	
FB730	1-414-553-11	FERRITE	0UH	
FB731	1-414-553-11	FERRITE	0UH	
FB732	1-414-553-11	FERRITE	0UH	
FB733	1-414-553-11	FERRITE	0UH	
FB734	1-414-553-11	FERRITE	0UH	
		< IC >		
IC601	8-759-446-66	IC MM1113XFBE		
IC602	8-759-432-78	IC MM1111XFBE		
IC603	8-759-522-11	IC BA7660FS-E2		
IC604	8-759-100-96	IC uPC4558G2		
IC607	8-759-522-11	IC BA7660FS-E2		
IC608	8-759-100-96	IC uPC4558G2		
		< COIL >		
L601	1-414-940-21	INDUCTOR	100uH	
L602	1-414-940-21	INDUCTOR	100uH	
L603	1-414-940-21	INDUCTOR	100uH	
L604	1-414-940-21	INDUCTOR	100uH	
		< TRANSISTOR >		
Q601	8-729-421-19	TRANSISTOR	UN2213	
Q602	8-729-421-19	TRANSISTOR	UN2213	
Q604	8-729-023-22	TRANSISTOR	2SD2114KT146	
Q605	8-729-023-22	TRANSISTOR	2SD2114KT146	
Q606	8-729-421-19	TRANSISTOR	UN2213	
Q607	8-729-023-22	TRANSISTOR	2SD2114KT146	
Q608	8-729-023-22	TRANSISTOR	2SD2114KT146	
Q612	8-729-424-18	TRANSISTOR	UN2113	
Q614	8-729-023-22	TRANSISTOR	2SD2114KT146	
Q615	8-729-023-22	TRANSISTOR	2SD2114KT146	
Q621	8-729-424-18	TRANSISTOR	UN2113	
Q622	8-729-023-22	TRANSISTOR	2SD2114KT146	
Q623	8-729-023-22	TRANSISTOR	2SD2114KT146	
Q624	8-729-424-18	TRANSISTOR	UN2113	
Q625	8-729-023-22	TRANSISTOR	2SD2114KT146	
Q626	8-729-023-22	TRANSISTOR	2SD2114KT146	
Q627	8-729-421-19	TRANSISTOR	UN2213	
Q628	8-729-422-27	TRANSISTOR	2SD601A-Q	
Q629	8-729-422-27	TRANSISTOR	2SD601A-Q	
Q630	8-729-421-19	TRANSISTOR	UN2213	
Q632	8-729-422-27	TRANSISTOR	2SD601A-Q	
Q633	8-729-023-22	TRANSISTOR	2SD2114KT146	
Q634	8-729-023-22	TRANSISTOR	2SD2114KT146	
Q635	8-729-424-38	TRANSISTOR	UN2110	
Q636	8-729-424-28	TRANSISTOR	UN2116	
Q637	8-729-421-19	TRANSISTOR	UN2213	
Q638	8-729-421-19	TRANSISTOR	UN2213	
Q639	8-729-422-27	TRANSISTOR	2SD601A-Q	
Q640	8-729-421-19	TRANSISTOR	UN2213	
Q641	8-729-421-19	TRANSISTOR	UN2213	

Ref. No.	Part No.	Description			Remark
		< RESISTOR >			
R601	1-216-295-91	SHORT	0		
R603	1-216-295-91	SHORT	0		
R604	1-216-295-91	SHORT	0		
R605	1-216-295-91	SHORT	0		
R606	1-216-295-91	SHORT	0		
R607	1-216-295-91	SHORT	0		
R608	1-216-295-91	SHORT	0		
R609	1-216-097-91	RES, CHIP	100K	5%	1/10W
R610	1-216-097-91	RES, CHIP	100K	5%	1/10W
R611	1-216-081-00	METAL CHIP	22K	5%	1/10W
R612	1-216-081-00	METAL CHIP	22K	5%	1/10W
R613	1-216-295-91	SHORT	0		
R614	1-216-077-00	METAL CHIP	15K	5%	1/10W
R615	1-216-077-00	METAL CHIP	15K	5%	1/10W
R616	1-216-049-91	RES, CHIP	1K	5%	1/10W
R617	1-216-049-91	RES, CHIP	1K	5%	1/10W
R618	1-216-295-91	SHORT	0		
R619	1-216-073-00	METAL CHIP	10K	5%	1/10W
R620	1-216-073-00	METAL CHIP	10K	5%	1/10W
R621	1-216-073-00	METAL CHIP	10K	5%	1/10W
R622	1-216-073-00	METAL CHIP	10K	5%	1/10W
R623	1-216-049-91	RES, CHIP	1K	5%	1/10W
R624	1-216-049-91	RES, CHIP	1K	5%	1/10W
R625	1-216-095-00	METAL CHIP	82K	5%	1/10W
R626	1-216-095-00	METAL CHIP	82K	5%	1/10W
R628	1-216-095-00	METAL CHIP	82K	5%	1/10W
R629	1-216-073-00	METAL CHIP	10K	5%	1/10W
R631	1-216-079-00	METAL CHIP	18K	5%	1/10W
R632	1-216-069-00	METAL CHIP	6.8K	5%	1/10W
R633	1-216-113-00	METAL CHIP	470K	5%	1/10W
R634	1-216-113-00	METAL CHIP	470K	5%	1/10W
R635	1-216-069-00	METAL CHIP	6.8K	5%	1/10W
R636	1-216-079-00	METAL CHIP	18K	5%	1/10W
R637	1-216-022-00	METAL CHIP	75	5%	1/10W
R638	1-216-113-00	METAL CHIP	470K	5%	1/10W
R639	1-216-113-00	METAL CHIP	470K	5%	1/10W
R640	1-216-041-00	METAL CHIP	470	5%	1/10W
R641	1-216-041-00	METAL CHIP	470	5%	1/10W
R642	1-216-113-00	METAL CHIP	470K	5%	1/10W
R644	1-216-049-91	RES, CHIP	1K	5%	1/10W
R645	1-216-049-91	RES, CHIP	1K	5%	1/10W
R646	1-216-097-91	RES, CHIP	100K	5%	1/10W
R647	1-216-295-91	SHORT	0		
R648	1-216-295-91	SHORT	0		
R649	1-216-295-91	SHORT	0		
R655	1-216-097-91	RES, CHIP	100K	5%	1/10W
R656	1-216-097-91	RES, CHIP	100K	5%	1/10W
R659	1-216-081-00	METAL CHIP	22K	5%	1/10W
R660	1-216-081-00	METAL CHIP	22K	5%	1/10W
R665	1-216-077-00	METAL CHIP	15K	5%	1/10W
R666	1-216-077-00	METAL CHIP	15K	5%	1/10W
R667	1-216-049-91	RES, CHIP	1K	5%	1/10W
R668	1-216-049-91	RES, CHIP	1K	5%	1/10W
R669	1-216-073-00	METAL CHIP	10K	5%	1/10W
R670	1-216-073-00	METAL CHIP	10K	5%	1/10W
R671	1-216-073-00	METAL CHIP	10K	5%	1/10W
R672	1-216-073-00	METAL CHIP	10K	5%	1/10W
R673	1-216-073-00	METAL CHIP	10K	5%	1/10W
R674	1-216-073-00	METAL CHIP	10K	5%	1/10W
R675	1-216-049-91	RES, CHIP	1K	5%	1/10W
R676	1-216-049-91	RES, CHIP	1K	5%	1/10W
R679	1-216-079-00	METAL CHIP	18K	5%	1/10W
R680	1-216-069-00	METAL CHIP	6.8K	5%	1/10W
R681	1-216-089-91	RES, CHIP	47K	5%	1/10W
R682	1-216-069-00	METAL CHIP	6.8K	5%	1/10W
R683	1-216-079-00	METAL CHIP	18K	5%	1/10W
R684	1-216-065-91	RES, CHIP	4.7K	5%	1/10W
R685	1-216-065-91	RES, CHIP	4.7K	5%	1/10W
R686	1-216-093-00	METAL CHIP	68K	5%	1/10W
R688	1-216-113-00	METAL CHIP	470K	5%	1/10W
R689	1-216-113-00	METAL CHIP	470K	5%	1/10W
R690	1-216-049-91	RES, CHIP	1K	5%	1/10W
R691	1-216-041-00	METAL CHIP	470	5%	1/10W
R692	1-216-041-00	METAL CHIP	470	5%	1/10W
R700	1-216-049-91	RES, CHIP	1K	5%	1/10W
R701	1-216-049-91	RES, CHIP	1K	5%	1/10W
R704	1-216-049-91	RES, CHIP	1K	5%	1/10W
R706	1-216-021-00	METAL CHIP	68	5%	1/10W
R707	1-216-021-00	METAL CHIP	68	5%	1/10W
R708	1-216-022-00	METAL CHIP	75	5%	1/10W
R709	1-216-022-00	METAL CHIP	75	5%	1/10W
R714	1-216-089-91	RES, CHIP	47K	5%	1/10W
R715	1-216-089-91	RES, CHIP	47K	5%	1/10W
R719	1-216-065-91	RES, CHIP	4.7K	5%	1/10W
R735	1-216-022-00	METAL CHIP	75	5%	1/10W
R736	1-216-022-00	METAL CHIP	75	5%	1/10W
R738	1-216-113-00	METAL CHIP	470K	5%	1/10W
R739	1-216-022-00	METAL CHIP	75	5%	1/10W
R740	1-216-022-00	METAL CHIP	75	5%	1/10W
R742	1-216-025-91	RES, CHIP	100	5%	1/10W
R744	1-216-017-91	RES, CHIP	47	5%	1/10W
R747	1-216-035-00	METAL CHIP	270	5%	1/10W
R748	1-216-035-00	METAL CHIP	270	5%	1/10W
R749	1-216-037-00	METAL CHIP	330	5%	1/10W
R750	1-216-037-00	METAL CHIP	330	5%	1/10W
R753	1-216-049-91	RES, CHIP	1K	5%	1/10W
R754	1-216-089-91	RES, CHIP	47K	5%	1/10W
R755	1-216-049-91	RES, CHIP	1K	5%	1/10W
		< RELAY >			
RY601	1-515-622-11	RELAY			
RY602	1-515-622-11	RELAY			

Ref. No.	Part No.	Description	Remark
*	A-6065-078-A	FG-43 BOARD, COMPLETE **********************	
			(Ref.No.3,000 Series)
		< CONNECTOR >	
CN501	1-784-684-11	CONNECTOR, FFC/FPC 8P	
		< IC >	
IC501	8-719-052-42	IC ELEMENT, HOLE HW-108A-FT(D)	
IC502	8-719-052-42	IC ELEMENT, HOLE HW-108A-FT(D)	

Ref. No.	Part No.	Description			Remark
*	A-6065-112-A	FL-88 BOARD, COMPLETE			
		**********************			
		(Ref.No.2,000 Series)			
*	3-988-021-01	HOLDER, FL			
		< CAPACITOR >			
C101	1-126-205-11	ELECT CHIP	47uF	20%	6.3V
C102	1-164-232-11	CERAMIC CHIP	0.01uF		50V
C103	1-126-205-11	ELECT CHIP	47uF	20%	6.3V
C104	1-165-319-11	CERAMIC CHIP	0.1uF		50V
C105	1-126-400-11	ELECT	22uF	20%	35V
C106	1-126-603-11	ELECT CHIP	4.7uF	20%	35V
C107	1-164-489-11	CERAMIC CHIP	0.22uF	10%	16V
C109	1-163-259-91	CERAMIC CHIP	220PF	5%	50V
C110	1-165-319-11	CERAMIC CHIP	0.1uF		50V
C111	1-126-204-11	ELECT CHIP	47uF	20%	16V
C112	1-164-232-11	CERAMIC CHIP	0.01uF		50V
C113	1-126-603-11	ELECT CHIP	4.7uF	20%	35V
		< CONNECTOR >			
CN101	1-770-703-11	CONNECTOR, FFC/FPC 20P			
CN102	1-568-662-11	CONNECTOR, BOARD TO BOARD 6P			
CN103	1-784-683-11	CONNECTOR, FFC/FPC 9P			
		< DIODE >			
D121	8-719-056-06	DIODE SLR-342DCT31			
D122	8-719-420-14	DIODE MA8082-M			
D123	8-719-977-61	DIODE DTZ20B			
D125	8-719-210-39	DIODE EC10QS-04			
D130	8-719-404-49	DIODE MA111			
		< FERRITE BEAD >			
FB101	1-414-553-11	INDUCTOR 0UH			
FB102	1-414-553-11	INDUCTOR 0UH			
* FB103	1-500-449-21	FERRITE 0UH			
		< FILTER >			
FL101	1-233-893-21	FILTER, CHIP EMI			
		< IC >			
IC101	8-759-438-82	IC uPD16311GC-AB6			
		< COIL >			
L101	1-414-936-21	INDUCTOR 22uH			
L102	1-412-058-11	INDUCTOR CHIP 10uH			
L103	1-412-058-11	INDUCTOR CHIP 10uH			
L104	1-412-058-11	INDUCTOR CHIP 10uH			
L105	1-412-058-11	INDUCTOR CHIP 10uH			
		< FLUORESCENT INDICATOR >			
ND101	1-517-715-11	INDICATOR TUBE, FLUORESCENT			
		< TRANSISTOR >			
Q115	8-729-105-29	TRANSISTOR 2SA1385			
Q117	8-729-216-22	TRANSISTOR 2SA1162			
		< RESISTOR >			
R113	1-216-073-00	METAL CHIP	10K	5%	1/10W
R114	1-216-073-00	METAL CHIP	10K	5%	1/10W

Ref. No.	Part No.	Description			Remark
R115	1-216-073-00	METAL CHIP	10K	5%	1/10W
R116	1-216-073-00	METAL CHIP	10K	5%	1/10W
R117	1-216-037-00	METAL CHIP	330	5%	1/10W
R118	1-216-049-91	RES, CHIP	1K	5%	1/10W
R119	1-216-091-00	METAL CHIP	56K	5%	1/10W
R120	1-216-073-00	METAL CHIP	10K	5%	1/10W
R123	1-216-073-00	METAL CHIP	10K	5%	1/10W
R124	1-216-063-91	RES, CHIP	3.9K	5%	1/10W
R126	1-216-009-00	METAL CHIP	22	5%	1/10W
R127	1-216-063-91	RES, CHIP	3.9K	5%	1/10W
R128	1-216-077-00	METAL CHIP	15K	5%	1/10W
R129	1-216-061-00	METAL CHIP	3.3K	5%	1/10W
R130	1-216-025-91	RES, CHIP	100	5%	1/10W
R131	1-216-025-91	RES, CHIP	100	5%	1/10W
R132	1-216-025-91	RES, CHIP	100	5%	1/10W
R133	1-216-025-91	RES, CHIP	100	5%	1/10W
R136	1-216-083-00	METAL CHIP	27K	5%	1/10W
R137	1-216-295-91	SHORT	0		
R151	1-216-053-00	METAL CHIP	1.5K	5%	1/10W
R152	1-216-055-00	METAL CHIP	1.8K	5%	1/10W
R153	1-216-059-00	METAL CHIP	2.7K	5%	1/10W
R154	1-216-061-00	METAL CHIP	3.3K	5%	1/10W
R155	1-216-065-91	RES, CHIP	4.7K	5%	1/10W
R156	1-216-071-00	METAL CHIP	8.2K	5%	1/10W
R157	1-216-077-00	METAL CHIP	15K	5%	1/10W
R161	1-216-053-00	METAL CHIP	1.5K	5%	1/10W
R162	1-216-055-00	METAL CHIP	1.8K	5%	1/10W
R163	1-216-059-00	METAL CHIP	2.7K	5%	1/10W
R164	1-216-061-00	METAL CHIP	3.3K	5%	1/10W
R165	1-216-065-91	RES, CHIP	4.7K	5%	1/10W
R166	1-216-071-00	METAL CHIP	8.2K	5%	1/10W
R167	1-216-077-00	METAL CHIP	15K	5%	1/10W
R171	1-216-053-00	METAL CHIP	1.5K	5%	1/10W
R172	1-216-055-00	METAL CHIP	1.8K	5%	1/10W
R173	1-216-059-00	METAL CHIP	2.7K	5%	1/10W
R187	1-216-073-00	METAL CHIP	10K	5%	1/10W
		< SWITCH >			
S105	1-771-349-21	SWITCH, KEYBOARD (CLEAR)			
S106	1-771-349-21	SWITCH, KEYBOARD (REPEAT)			
S107	1-771-349-21	SWITCH, KEYBOARD (PROGRAM)			
S108	1-771-349-21	SWITCH, KEYBOARD (SHUFFLE)			
S114	1-771-349-21	SWITCH, KEYBOARD (PAUSE)			
S115	1-771-349-21	SWITCH, KEYBOARD (STOP)			
S116	1-771-349-21	SWITCH, KEYBOARD (PREV)			
S117	1-771-349-21	SWITCH, KEYBOARD (NEXT)			
S118	1-771-349-21	SWITCH, KEYBOARD (JOG)			
S119	1-771-349-21	SWITCH, KEYBOARD (RETURN)			
S120	1-771-349-21	SWITCH, KEYBOARD (DVD MENU)			
S121	1-771-349-21	SWITCH, KEYBOARD (TITLE)			
S122	1-771-349-21	SWITCH, KEYBOARD (PLAY)			
S123	1-771-349-21	SWITCH, KEYBOARD (OPEN/CLOSE)			
		< TRANSFORMER >			
T101	1-431-778-11	TRANSFORMER, DC-DC CONVERTER			

Ref. No.	Part No.	Description			Remark
*	A-6065-074-A	FR-133 BOARD, COMPLETE			
		************************			
					(Ref.No.2,000 Series)
		< CAPACITOR >			
C401	1-126-205-11	ELECT CHIP	47uF	20%	6.3V
		< CONNECTOR >			
CN401	1-568-668-11	CONNECTOR, BOARD TO BOARD 6P			
CN402	1-779-154-11	HOUSING, CONNECTOR 2P			
		< DIODE >			
D401	8-719-064-11	DIODE SPR-325MVW			
		< IC >			
IC401	8-749-011-22	IC GP1U27X			
		< COIL >			
L401	1-414-936-21	INDUCTOR	22uH		
		< TRANSISTOR >			
Q401	8-729-424-08	TRANSISTOR UN2111			
		< RESISTOR >			
R401	1-216-045-00	METAL CHIP	680	5%	1/10W
R402	1-216-033-00	METAL CHIP	220	5%	1/10W
R403	1-216-295-91	SHORT	0		
		< SWITCH >			
S401	1-771-349-21	SWITCH, KEYBOARD (POWER)			

Ref. No.	Part No.	Description			Remark
*	A-6065-075-A	HP-96 BOARD, COMPLETE (S300)			
*	A-6065-114-A	HP-96 BOARD, COMPLETE (S315)			
		**********************			
					(Ref.No.4,000 Series)
		< CAPACITOR >			
C002	1-163-011-11	CERAMIC CHIP	0.0015uF	10%	50V
C003	1-163-011-11	CERAMIC CHIP	0.0015uF	10%	50V
C008	1-164-232-11	CERAMIC CHIP	0.01uF		50V
C009	1-164-232-11	CERAMIC CHIP	0.01uF		50V
		< CONNECTOR >			
CN001	1-573-733-11	PIN, CONNECTOR 6P			
		< DIODE >			
D001	8-719-800-76	DIODE 1SS226			
D002	8-719-016-73	DIODE STZ6.8TT146			
D003	8-719-016-73	DIODE STZ6.8TT146			
		< FERRITE BEAD >			
FB001	1-414-135-11	INDUCTOR CHIP 0UH			
FB002	1-414-135-11	INDUCTOR CHIP 0UH			
FB003	1-414-135-11	INDUCTOR CHIP 0UH			
		< IC >			
IC001	8-759-369-74	IC NJM4556AM-TE2			
		< JACK >			
J001	1-568-519-41	JACK, LARGE TYPE (PHONES)			
		< TRANSISTOR >			
Q001	8-729-023-22	TRANSISTOR 2SD2114KT146			
Q002	8-729-023-22	TRANSISTOR 2SD2114KT146			
		< RESISTOR >			
R001	1-216-029-00	METAL CHIP	150	5%	1/10W
R002	1-216-029-00	METAL CHIP	150	5%	1/10W
R003	1-216-089-91	RES, CHIP	47K	5%	1/10W
R004	1-216-089-91	RES, CHIP	47K	5%	1/10W
R005	1-216-081-00	METAL CHIP	22K	5%	1/10W
R006	1-216-081-00	METAL CHIP	22K	5%	1/10W
R007	1-216-049-91	RES, CHIP	1K	5%	1/10W
R008	1-216-049-91	RES, CHIP	1K	5%	1/10W
R009	1-216-049-91	RES, CHIP	1K	5%	1/10W
R010	1-216-049-91	RES, CHIP	1K	5%	1/10W
R011	1-216-295-91	SHORT	0		
R012	1-216-295-91	SHORT	0		
		< VARIABLE RESISTOR >			
RV001	1-225-606-11	RES, VAR, CARBON 10K/10K (LEVEL)			

Ref. No.	Part No.	Description			Remark
		MB-78 BOARD, COMPLETE			
		**********************			
					(Ref.No.1,000 Series)
*	1-251-496-21	SO CKET, IC			
	3-709-100-01	COVER, IC SOCKET			
		< CAPACITOR >			
C002	1-126-206-11	ELECT CHIP	100uF	20%	6.3V
C003	1-126-206-11	ELECT CHIP	100uF	20%	6.3V
C004	1-126-204-11	ELECT CHIP	47uF	20%	16V
C005	1-126-204-11	ELECT CHIP	47uF	20%	16V
C006	1-126-204-11	ELECT CHIP	47uF	20%	16V
C007	1-126-206-11	ELECT CHIP	100uF	20%	6.3V
C008	1-126-206-11	ELECT CHIP	100uF	20%	6.3V
C009	1-107-682-11	CERAMIC CHIP	1uF	10%	16V
C010	1-107-682-11	CERAMIC CHIP	1uF	10%	16V
C011	1-126-206-11	ELECT CHIP	100uF	20%	6.3V
C012	1-126-206-11	ELECT CHIP	100uF	20%	6.3V
C015	1-126-204-11	ELECT CHIP	47uF	20%	16V
C016	1-126-206-11	ELECT CHIP	100uF	20%	6.3V
C017	1-126-206-11	ELECT CHIP	100uF	20%	6.3V
C018	1-126-204-11	ELECT CHIP	47uF	20%	16V
C021	1-126-204-11	ELECT CHIP	47uF	20%	16V
C023	1-126-206-11	ELECT CHIP	100uF	20%	6.3V
C025	1-126-204-11	ELECT CHIP	47uF	20%	16V
C026	1-126-206-11	ELECT CHIP	100uF	20%	6.3V
C031	1-126-206-11	ELECT CHIP	100uF	20%	6.3V
C200	1-162-970-11	CERAMIC CHIP	0.01uF	10%	25V
C201	1-126-206-11	ELECT CHIP	100uF	20%	6.3V
C202	1-162-970-11	CERAMIC CHIP	0.01uF	10%	25V
C203	1-162-970-11	CERAMIC CHIP	0.01uF	10%	25V
C204	1-162-970-11	CERAMIC CHIP	0.01uF	10%	25V
C205	1-162-970-11	CERAMIC CHIP	0.01uF	10%	25V
C206	1-162-970-11	CERAMIC CHIP	0.01uF	10%	25V

Ref. No.	Part No.	Description			Remark
C207	1-162-970-11	CERAMIC CHIP	0.01uF	10%	25V
C208	1-162-970-11	CERAMIC CHIP	0.01uF	10%	25V
C209	1-162-970-11	CERAMIC CHIP	0.01uF	10%	25V
C210	1-162-970-11	CERAMIC CHIP	0.01uF	10%	25V
C211	1-162-970-11	CERAMIC CHIP	0.01uF	10%	25V
C214	1-162-970-11	CERAMIC CHIP	0.01uF	10%	25V
C215	1-162-964-11	CERAMIC CHIP	0.001uF	10%	50V
C216	1-162-970-11	CERAMIC CHIP	0.01uF	10%	25V
C217	1-162-970-11	CERAMIC CHIP	0.01uF	10%	25V
C218	1-162-970-11	CERAMIC CHIP	0.01uF	10%	25V
C219	1-128-004-11	ELECT CHIP	10uF	20%	16V
C220	1-162-970-11	CERAMIC CHIP	0.01uF	10%	25V
C221	1-162-970-11	CERAMIC CHIP	0.01uF	10%	25V
C222	1-162-970-11	CERAMIC CHIP	0.01uF	10%	25V
C224	1-162-970-11	CERAMIC CHIP	0.01uF	10%	25V
C226	1-162-970-11	CERAMIC CHIP	0.01uF	10%	25V
C227	1-162-970-11	CERAMIC CHIP	0.01uF	10%	25V
C228	1-162-970-11	CERAMIC CHIP	0.01uF	10%	25V
C229	1-126-204-11	ELECT CHIP	47uF	20%	16V
C230	1-162-915-11	CERAMIC CHIP	10PF	0.5PF	50V
C231	1-162-970-11	CERAMIC CHIP	0.01uF	10%	25V
C232	1-162-917-11	CERAMIC CHIP	15PF	5%	50V
C233	1-162-970-11	CERAMIC CHIP	0.01uF	10%	25V
C234	1-162-970-11	CERAMIC CHIP	0.01uF	10%	25V
C235	1-126-204-11	ELECT CHIP	47uF	20%	16V (S315)
C236	1-162-970-11	CERAMIC CHIP	0.01uF	10%	25V
C237	1-162-970-11	CERAMIC CHIP	0.01uF	10%	25V (S315)
C238	1-126-204-11	ELECT CHIP	47uF	20%	16V (S315)
C240	1-126-206-11	ELECT CHIP	100uF	20%	6.3V
C250	1-162-970-11	CERAMIC CHIP	0.01uF	10%	25V
C251	1-162-970-11	CERAMIC CHIP	0.01uF	10%	25V (S305)
C252	1-128-004-11	ELECT CHIP	10uF	20%	16V (S305)
C253	1-162-970-11	CERAMIC CHIP	0.01uF	10%	25V (S305)
C254	1-162-970-11	CERAMIC CHIP	0.01uF	10%	25V (S305)
C255	1-162-970-11	CERAMIC CHIP	0.01uF	10%	25V (S305)
C256	1-162-970-11	CERAMIC CHIP	0.01uF	10%	25V (S305)
C257	1-128-004-11	ELECT CHIP	10uF	20%	16V
C258	1-162-970-11	CERAMIC CHIP	0.01uF	10%	25V
C259	1-128-004-11	ELECT CHIP	10uF	20%	16V
C260	1-162-970-11	CERAMIC CHIP	0.01uF	10%	25V
C261	1-162-970-11	CERAMIC CHIP	0.01uF	10%	25V
C262	1-162-970-11	CERAMIC CHIP	0.01uF	10%	25V
C263	1-162-970-11	CERAMIC CHIP	0.01uF	10%	25V
C264	1-107-826-11	CERAMIC CHIP	0.1uF	10%	16V
C265	1-162-970-11	CERAMIC CHIP	0.01uF	10%	25V
C266	1-162-970-11	CERAMIC CHIP	0.01uF	10%	25V
C267	1-107-826-11	CERAMIC CHIP	0.1uF	10%	16V
C268	1-107-826-11	CERAMIC CHIP	0.1uF	10%	16V
C269	1-162-970-11	CERAMIC CHIP	0.01uF	10%	25V
C270	1-162-917-11	CERAMIC CHIP	15PF	5%	50V
C271	1-162-917-11	CERAMIC CHIP	15PF	5%	50V (S315)

Ref. No.	Part No.	Description			Remark
C271	1-162-921-11	CERAMIC CHIP	33PF	5%	50V (S300/S305)
C272	1-162-917-11	CERAMIC CHIP	15PF	5%	50V
C281	1-107-826-11	CERAMIC CHIP	0.1uF	10%	16V (S315)
C282	1-107-826-11	CERAMIC CHIP	0.1uF	10%	16V (S315)
C301	1-162-967-11	CERAMIC CHIP	0.0033uF	10%	50V
C303	1-126-193-11	ELECT	1uF	20%	50V
C304	1-162-967-11	CERAMIC CHIP	0.0033uF	10%	50V
C305	1-165-176-11	CERAMIC CHIP	0.047uF	10%	16V
C306	1-162-970-11	CERAMIC CHIP	0.01uF	10%	25V
C309	1-164-245-11	CERAMIC CHIP	0.015uF	10%	25V
C310	1-162-967-11	CERAMIC CHIP	0.0033uF	10%	50V
C312	1-164-489-11	CERAMIC CHIP	0.22uF	10%	16V
C313	1-162-967-11	CERAMIC CHIP	0.0033uF	10%	50V
C314	1-162-968-11	CERAMIC CHIP	0.0047uF	10%	50V
C315	1-162-968-11	CERAMIC CHIP	0.0047uF	10%	50V
C316	1-128-004-11	ELECT CHIP	10uF	20%	16V
C317	1-162-967-11	CERAMIC CHIP	0.0033uF	10%	50V
C318	1-162-967-11	CERAMIC CHIP	0.0033uF	10%	50V
C319	1-162-970-11	CERAMIC CHIP	0.01uF	10%	25V
C320	1-162-967-11	CERAMIC CHIP	0.0033uF	10%	50V
C321	1-162-970-11	CERAMIC CHIP	0.01uF	10%	25V
C322	1-162-967-11	CERAMIC CHIP	0.0033uF	10%	50V
C323	1-109-982-11	CERAMIC CHIP	1uF	10%	10V
C324	1-162-967-11	CERAMIC CHIP	0.0033uF	10%	50V
C325	1-165-176-11	CERAMIC CHIP	0.047uF	10%	16V
C326	1-128-004-11	ELECT CHIP	10uF	20%	16V
C327	1-162-970-11	CERAMIC CHIP	0.01uF	10%	25V
C328	1-107-826-11	CERAMIC CHIP	0.1uF	10%	16V
C329	1-162-970-11	CERAMIC CHIP	0.01uF	10%	25V
C330	1-107-826-11	CERAMIC CHIP	0.1uF	10%	16V
C331	1-107-826-11	CERAMIC CHIP	0.1uF	10%	16V
C332	1-107-826-11	CERAMIC CHIP	0.1uF	10%	16V
C333	1-162-970-11	CERAMIC CHIP	0.01uF	10%	25V
C334	1-107-826-11	CERAMIC CHIP	0.1uF	10%	16V
C335	1-126-204-11	ELECT CHIP	47uF	20%	16V
C336	1-162-970-11	CERAMIC CHIP	0.01uF	10%	25V
C337	1-126-204-11	ELECT CHIP	47uF	20%	16V
C338	1-107-826-11	CERAMIC CHIP	0.1uF	10%	16V
C339	1-162-970-11	CERAMIC CHIP	0.01uF	10%	25V
C340	1-128-004-11	ELECT CHIP	10uF	20%	16V
C342	1-162-970-11	CERAMIC CHIP	0.01uF	10%	25V
C343	1-162-970-11	CERAMIC CHIP	0.01uF	10%	25V
C344	1-162-970-11	CERAMIC CHIP	0.01uF	10%	25V
C362	1-162-970-11	CERAMIC CHIP	0.01uF	10%	25V
C363	1-128-004-11	ELECT CHIP	10uF	20%	16V
C365	1-162-970-11	CERAMIC CHIP	0.01uF	10%	25V
C366	1-128-004-11	ELECT CHIP	10uF	20%	16V
C367	1-107-826-11	CERAMIC CHIP	0.1uF	10%	16V
C368	1-107-826-11	CERAMIC CHIP	0.1uF	10%	16V
C369	1-107-826-11	CERAMIC CHIP	0.1uF	10%	16V
C370	1-107-826-11	CERAMIC CHIP	0.1uF	10%	16V
C372	1-162-970-11	CERAMIC CHIP	0.01uF	10%	25V
C373	1-128-004-11	ELECT CHIP	10uF	20%	16V
C378	1-107-826-11	CERAMIC CHIP	0.1uF	10%	16V
C379	1-107-826-11	CERAMIC CHIP	0.1uF	10%	16V
C380	1-107-826-11	CERAMIC CHIP	0.1uF	10%	16V
C381	1-107-826-11	CERAMIC CHIP	0.1uF	10%	16V

Ref. No.	Part No.	Description			Remark
C382	1-107-826-11	CERAMIC CHIP	0.1uF	10%	16V
C383	1-107-826-11	CERAMIC CHIP	0.1uF	10%	16V
C384	1-107-826-11	CERAMIC CHIP	0.1uF	10%	16V
C385	1-107-826-11	CERAMIC CHIP	0.1uF	10%	16V
C386	1-128-004-11	ELECT CHIP	10uF	20%	16V
C387	1-107-682-11	CERAMIC CHIP	1uF	10%	16V
C388	1-162-928-11	CERAMIC CHIP	120PF	5%	50V
C389	1-162-927-11	CERAMIC CHIP	100PF	5%	50V
C390	1-110-563-11	CERAMIC CHIP	0.068uF	10%	16V
C391	1-110-563-11	CERAMIC CHIP	0.068uF	10%	16V
C392	1-162-957-11	CERAMIC CHIP	220PF	5%	50V
C393	1-162-957-11	CERAMIC CHIP	220PF	5%	50V
C394	1-164-473-11	CERAMIC CHIP	820PF	10%	50V
C395	1-164-473-11	CERAMIC CHIP	820PF	10%	50V
C396	1-164-473-11	CERAMIC CHIP	820PF	10%	50V
C397	1-164-473-11	CERAMIC CHIP	820PF	10%	50V
C454	1-162-970-11	CERAMIC CHIP	0.01uF	10%	25V
C466	1-162-970-11	CERAMIC CHIP	0.01uF	10%	25V
C467	1-162-970-11	CERAMIC CHIP	0.01uF	10%	25V
C468	1-128-004-11	ELECT CHIP	10uF	20%	16V
C502	1-162-964-11	CERAMIC CHIP	0.001uF	10%	50V
C503	1-124-778-00	ELECT CHIP	22uF	20%	6.3V
C504	1-107-826-11	CERAMIC CHIP	0.1uF	10%	16V (S315)
C504	1-162-964-11	CERAMIC CHIP	0.001uF	10%	50V (S300/S305)
C506	1-162-964-11	CERAMIC CHIP	0.001uF	10%	50V
C507	1-162-959-11	CERAMIC CHIP	330PF	5%	50V
C510	1-107-826-11	CERAMIC CHIP	0.1uF	10%	16V
C511	1-162-925-11	CERAMIC CHIP	68PF	5%	50V
C512	1-162-968-11	CERAMIC CHIP	0.0047uF	10%	50V
C513	1-115-412-11	CERAMIC CHIP	680PF	5%	25V
C514	1-162-957-11	CERAMIC CHIP	220PF	5%	50V
C516	1-164-245-11	CERAMIC CHIP	0.015uF	10%	25V
C517	1-164-489-11	CERAMIC CHIP	0.22uF	10%	16V
C518	1-162-970-11	CERAMIC CHIP	0.01uF	10%	25V
C519	1-162-968-11	CERAMIC CHIP	0.0047uF	10%	50V (S300/S305)
C520	1-162-968-11	CERAMIC CHIP	0.0047uF	10%	50V
C521	1-162-964-11	CERAMIC CHIP	0.001uF	10%	50V
C522	1-162-927-11	CERAMIC CHIP	100PF	5%	50V
C524	1-107-826-11	CERAMIC CHIP	0.1uF	10%	16V (S315)
C524	1-162-964-11	CERAMIC CHIP	0.001uF	10%	50V (S300/S305)
C525	1-165-176-11	CERAMIC CHIP	0.047uF	10%	16V (S315)
C526	1-107-826-11	CERAMIC CHIP	0.1uF	10%	16V (S315)
C526	1-162-964-11	CERAMIC CHIP	0.001uF	10%	50V (S300/S305)
C528	1-162-970-11	CERAMIC CHIP	0.01uF	10%	25V
C529	1-164-227-11	CERAMIC CHIP	0.022uF	10%	25V
C530	1-164-217-11	CERAMIC CHIP	150PF	5%	50V
C531	1-162-964-11	CERAMIC CHIP	0.001uF	10%	50V
C532	1-162-970-11	CERAMIC CHIP	0.01uF	10%	25V
C533	1-128-004-11	ELECT CHIP	10uF	20%	16V
C534	1-162-970-11	CERAMIC CHIP	0.01uF	10%	25V
C535	1-162-970-11	CERAMIC CHIP	0.01uF	10%	25V
C537	1-128-004-11	ELECT CHIP	10uF	20%	16V
C538	1-107-826-11	CERAMIC CHIP	0.1uF	10%	16V
C539	1-107-826-11	CERAMIC CHIP	0.1uF	10%	16V

Ref. No.	Part No.	Description			Remark
C540	1-162-970-11	CERAMIC CHIP	0.01uF	10%	25V
C541	1-128-004-11	ELECT CHIP	10uF	20%	16V
C542	1-107-826-11	CERAMIC CHIP	0.1uF	10%	16V
C543	1-128-004-11	ELECT CHIP	10uF	20%	16V
C544	1-162-970-11	CERAMIC CHIP	0.01uF	10%	25V
C545	1-162-970-11	CERAMIC CHIP	0.01uF	10%	25V
C546	1-162-970-11	CERAMIC CHIP	0.01uF	10%	25V
C547	1-162-970-11	CERAMIC CHIP	0.01uF	10%	25V
C548	1-128-004-11	ELECT CHIP	10uF	20%	16V
C549	1-107-826-11	CERAMIC CHIP	0.1uF	10%	16V
C550	1-107-826-11	CERAMIC CHIP	0.1uF	10%	16V
C551	1-107-826-11	CERAMIC CHIP	0.1uF	10%	16V
C552	1-124-778-00	ELECT CHIP	22uF	20%	6.3V
C553	1-162-969-11	CERAMIC CHIP	0.0068uF	10%	25V
C554	1-162-969-11	CERAMIC CHIP	0.0068uF	10%	25V
C555	1-162-970-11	CERAMIC CHIP	0.01uF	10%	25V
C556	1-162-970-11	CERAMIC CHIP	0.01uF	10%	25V
C558	1-164-489-11	CERAMIC CHIP	0.22uF	10%	16V
C559	1-162-970-11	CERAMIC CHIP	0.01uF	10%	25V
C560	1-162-970-11	CERAMIC CHIP	0.01uF	10%	25V
C561	1-162-970-11	CERAMIC CHIP	0.01uF	10%	25V
C562	1-162-970-11	CERAMIC CHIP	0.01uF	10%	25V
C601	1-162-970-11	CERAMIC CHIP	0.01uF	10%	25V
C602	1-162-970-11	CERAMIC CHIP	0.01uF	10%	25V
C603	1-162-970-11	CERAMIC CHIP	0.01uF	10%	25V
C604	1-162-970-11	CERAMIC CHIP	0.01uF	10%	25V
C605	1-162-970-11	CERAMIC CHIP	0.01uF	10%	25V
C606	1-162-970-11	CERAMIC CHIP	0.01uF	10%	25V
C607	1-162-970-11	CERAMIC CHIP	0.01uF	10%	25V
C608	1-162-970-11	CERAMIC CHIP	0.01uF	10%	25V
C609	1-162-970-11	CERAMIC CHIP	0.01uF	10%	25V
C610	1-162-970-11	CERAMIC CHIP	0.01uF	10%	25V
C611	1-162-970-11	CERAMIC CHIP	0.01uF	10%	25V
C612	1-162-970-11	CERAMIC CHIP	0.01uF	10%	25V
C613	1-162-970-11	CERAMIC CHIP	0.01uF	10%	25V
C614	1-162-970-11	CERAMIC CHIP	0.01uF	10%	25V
C615	1-162-970-11	CERAMIC CHIP	0.01uF	10%	25V
C616	1-162-970-11	CERAMIC CHIP	0.01uF	10%	25V
C617	1-162-970-11	CERAMIC CHIP	0.01uF	10%	25V
C618	1-126-205-11	ELECT CHIP	47uF	20%	6.3V
C619	1-162-970-11	CERAMIC CHIP	0.01uF	10%	25V
C620	1-162-970-11	CERAMIC CHIP	0.01uF	10%	25V
C621	1-162-970-11	CERAMIC CHIP	0.01uF	10%	25V
C629	1-162-970-11	CERAMIC CHIP	0.01uF	10%	25V
C630	1-162-964-11	CERAMIC CHIP	0.001uF	10%	50V (S300: US)
C800	1-162-970-11	CERAMIC CHIP	0.01uF	10%	25V
C801	1-162-970-11	CERAMIC CHIP	0.01uF	10%	25V
C802	1-162-970-11	CERAMIC CHIP	0.01uF	10%	25V
C803	1-162-970-11	CERAMIC CHIP	0.01uF	10%	25V
C804	1-162-970-11	CERAMIC CHIP	0.01uF	10%	25V
C805	1-162-970-11	CERAMIC CHIP	0.01uF	10%	25V
C806	1-162-970-11	CERAMIC CHIP	0.01uF	10%	25V
C807	1-162-970-11	CERAMIC CHIP	0.01uF	10%	25V
C808	1-162-970-11	CERAMIC CHIP	0.01uF	10%	25V
C809	1-162-970-11	CERAMIC CHIP	0.01uF	10%	25V
C810	1-162-970-11	CERAMIC CHIP	0.01uF	10%	25V
C811	1-162-917-11	CERAMIC CHIP	15PF	5%	50V
C812	1-162-917-11	CERAMIC CHIP	15PF	5%	50V
C813	1-162-970-11	CERAMIC CHIP	0.01uF	10%	25V

Ref. No.	Part No.	Description			Remark
C814	1-162-970-11	CERAMIC CHIP	0.01uF	10%	25V
C815	1-162-970-11	CERAMIC CHIP	0.01uF	10%	25V
C816	1-110-563-11	CERAMIC CHIP	0.068uF	10%	16V
C817	1-107-826-11	CERAMIC CHIP	0.1uF	10%	16V
C818	1-107-826-11	CERAMIC CHIP	0.1uF	10%	16V
C819	1-107-826-11	CERAMIC CHIP	0.1uF	10%	16V
C820	1-107-826-11	CERAMIC CHIP	0.1uF	10%	16V
C821	1-107-826-11	CERAMIC CHIP	0.1uF	10%	16V
C822	1-107-826-11	CERAMIC CHIP	0.1uF	10%	16V
C823	1-162-927-11	CERAMIC CHIP	100PF	5%	50V
C824	1-162-970-11	CERAMIC CHIP	0.01uF	10%	25V
C825	1-162-970-11	CERAMIC CHIP	0.01uF	10%	25V
C826	1-162-970-11	CERAMIC CHIP	0.01uF	10%	25V
C827	1-162-970-11	CERAMIC CHIP	0.01uF	10%	25V
C828	1-162-970-11	CERAMIC CHIP	0.01uF	10%	25V
C829	1-162-970-11	CERAMIC CHIP	0.01uF	10%	25V
C830	1-162-970-11	CERAMIC CHIP	0.01uF	10%	25V
C831	1-162-970-11	CERAMIC CHIP	0.01uF	10%	25V
C832	1-162-970-11	CERAMIC CHIP	0.01uF	10%	25V
C833	1-162-970-11	CERAMIC CHIP	0.01uF	10%	25V
C834	1-162-970-11	CERAMIC CHIP	0.01uF	10%	25V
C835	1-162-970-11	CERAMIC CHIP	0.01uF	10%	25V
C836	1-162-970-11	CERAMIC CHIP	0.01uF	10%	25V
C837	1-162-970-11	CERAMIC CHIP	0.01uF	10%	25V
C838	1-162-970-11	CERAMIC CHIP	0.01uF	10%	25V
C839	1-162-970-11	CERAMIC CHIP	0.01uF	10%	25V
C840	1-162-970-11	CERAMIC CHIP	0.01uF	10%	25V
C841	1-162-970-11	CERAMIC CHIP	0.01uF	10%	25V
C842	1-162-970-11	CERAMIC CHIP	0.01uF	10%	25V
C843	1-162-970-11	CERAMIC CHIP	0.01uF	10%	25V
C844	1-164-677-11	CERAMIC CHIP	0.033uF	10%	16V
C846	1-128-004-11	ELECT CHIP	10uF	20%	16V
C847	1-128-004-11	ELECT CHIP	10uF	20%	16V
C848	1-128-004-11	ELECT CHIP	10uF	20%	16V
C849	1-126-206-11	ELECT CHIP	100uF	20%	6.3V
C850	1-126-206-11	ELECT CHIP	100uF	20%	6.3V
C851	1-128-004-11	ELECT CHIP	10uF	20%	16V
C852	1-162-970-11	CERAMIC CHIP	0.01uF	10%	25V
C854	1-128-004-11	ELECT CHIP	10uF	20%	16V
C855	1-162-970-11	CERAMIC CHIP	0.01uF	10%	25V
C856	1-162-970-11	CERAMIC CHIP	0.01uF	10%	25V
C857	1-162-970-11	CERAMIC CHIP	0.01uF	10%	25V
C858	1-162-970-11	CERAMIC CHIP	0.01uF	10%	25V
C859	1-162-970-11	CERAMIC CHIP	0.01uF	10%	25V
C860	1-162-970-11	CERAMIC CHIP	0.01uF	10%	25V
C861	1-162-970-11	CERAMIC CHIP	0.01uF	10%	25V
C862	1-162-970-11	CERAMIC CHIP	0.01uF	10%	25V
C863	1-162-970-11	CERAMIC CHIP	0.01uF	10%	25V
C864	1-126-206-11	ELECT CHIP	100uF	20%	6.3V
C865	1-162-970-11	CERAMIC CHIP	0.01uF	10%	25V
		< CONNECTOR >			
CN001	1-778-768-21	PIN, CONNECTOR (PC BOARD) 8P			
CN002	1-784-687-41	PIN, CONNECTOR (PC BOARD) 7P			
CN101	1-774-769-11	CONNECTOR, FFC/FPC 25P			
CN251	1-770-692-11	CONNECTOR, FFC/FPC 9P (S315)			
CN252	1-774-769-11	CONNECTOR, FFC/FPC 25P			
CN301	1-784-684-11	CONNECTOR, FFC/FPC 8P			
CN302	1-784-326-11	CONNECTOR (FFC) 27P			
CN303	1-573-290-21	PIN, CONNECTOR (1.5MM) (SMD)4P			

Ref. No.	Part No.	Description	Remark
CN361	1-784-688-21	PIN, CONNECTOR (PC BOARD) 2P	
CN451	1-573-768-21	PIN, CONNECTOR (1.5MM) (SMD)5P	
CN452	1-784-326-11	CONNECTOR (FFC) 27P	
* CN601	1-580-802-21	SOCKET, CONNECTOR 20P (S315)	
CN601	1-784-685-11	CONNECTOR, FFC/FPC 20P (S300/S305)	
CN801	1-573-806-21	PIN, CONNECTOR (1.5MM) (SMD)6P	
		< TRIMMER >	
CT201	1-141-422-11	CAP, ADJ 10PF	
		< DIODE >	
D002	8-719-975-40	DIODE RB411D	
D101	8-719-988-62	DIODE 1SS355	
D102	8-719-988-62	DIODE 1SS355	
D103	8-719-988-62	DIODE 1SS355	
D502	8-719-988-62	DIODE 1SS355	
D601	8-719-988-62	DIODE 1SS355 (S300: US)	
D602	8-719-988-62	DIODE 1SS355 (S300: US)	
D801	8-719-988-62	DIODE 1SS355 (S315)	
D802	8-719-048-98	DIODE RB160L-40TE25	
		< FUSE >	
⚠F001	1-533-771-21	FUSE (SMD) (0.8A)	
⚠F002	1-533-771-21	FUSE (SMD) (0.8A)	
⚠F003	1-533-771-21	FUSE (SMD) (0.8A)	
⚠F004	1-533-771-21	FUSE (SMD) (0.8A)	
⚠F005	1-533-710-11	FUSE (SMD) (1.6A)	
⚠F006	1-533-710-11	FUSE (SMD) (1.6A)	
⚠F301	1-533-855-21	FUSE (SMD) (0.125A)	
⚠F302	1-533-855-21	FUSE (SMD) (0.125A)	
		< FERRITE BEAD >	
FB201	1-414-580-21	INDUCTOR 100NH (S315)	
FB201	1-500-283-11	INDUCTOR CHIP 0UH (S300/S305)	
FB295	1-414-445-11	FERRITE 0UH (S315)	
FB296	1-414-445-11	FERRITE 0UH (S315)	
FB298	1-414-445-11	FERRITE 0UH (S315)	
FB601	1-414-553-11	INDUCTOR 0UH	
FB602	1-414-553-11	INDUCTOR 0UH	
* FB603	1-500-449-21	FERRITE 0UH	
FB604	1-414-553-11	INDUCTOR 0UH	
FB605	1-414-553-11	INDUCTOR 0UH	
FB606	1-414-553-11	INDUCTOR 0UH	
FB607	1-414-553-11	INDUCTOR 0UH	
FB608	1-414-553-11	INDUCTOR 0UH	
FB609	1-414-553-11	INDUCTOR 0UH	
FB611	1-414-553-11	INDUCTOR 0UH	
* FB704	1-500-449-21	FERRITE 0UH	
* FB705	1-500-449-21	FERRITE 0UH	
* FB706	1-500-449-21	FERRITE 0UH	
* FB707	1-500-449-21	FERRITE 0UH	
* FB708	1-500-449-21	FERRITE 0UH	
* FB710	1-500-449-21	FERRITE 0UH	
* FB711	1-500-449-21	FERRITE 0UH	
* FB712	1-500-449-21	FERRITE 0UH	
* FB713	1-500-449-21	FERRITE 0UH	
* FB714	1-500-449-21	FERRITE 0UH	
* FB715	1-500-449-21	FERRITE 0UH	
* FB801	1-500-449-21	FERRITE 0UH	
* FB802	1-500-449-21	FERRITE 0UH	

MB-78

Ref. No.	Part No.	Description	Remark
FB803	1-500-283-11	INDUCTOR CHIP 0UH	
		< FILTER >	
FL001	1-233-893-21	FILTER, CHIP EMI	
FL002	1-233-893-21	FILTER, CHIP EMI	
FL003	1-233-893-21	FILTER, CHIP EMI	
FL004	1-233-893-21	FILTER, CHIP EMI	
FL005	1-233-893-21	FILTER, CHIP EMI	
FL006	1-233-893-21	FILTER, CHIP EMI	
FL007	1-233-893-21	FILTER, CHIP EMI	
FL008	1-233-893-21	FILTER, CHIP EMI	
FL201	1-233-893-21	FILTER, CHIP EMI	
FL202	1-233-893-21	FILTER, CHIP EMI	
FL204	1-239-400-11	FILTER, CHIP EMI	
FL205	1-239-400-11	FILTER, CHIP EMI	
FL207	1-239-400-11	FILTER, CHIP EMI	
FL208	1-233-893-21	FILTER, CHIP EMI	
FL209	1-239-400-11	FILTER, CHIP EMI	
FL210	1-239-400-11	FILTER, CHIP EMI	
FL211	1-233-893-21	FILTER, CHIP EMI	
FL212	1-233-893-21	FILTER, CHIP EMI	
FL213	1-239-400-11	FILTER, CHIP EMI	
FL251	1-233-893-21	FILTER, CHIP EMI (S305)	
FL252	1-233-893-21	FILTER, CHIP EMI	
FL254	1-233-893-21	FILTER, CHIP EMI	
FL501	1-233-893-21	FILTER, CHIP EMI	
FL502	1-233-893-21	FILTER, CHIP EMI	
FL601	1-233-893-21	FILTER, CHIP EMI	
FL801	1-233-893-21	FILTER, CHIP EMI	
FL802	1-233-893-21	FILTER, CHIP EMI	
FL803	1-233-893-21	FILTER, CHIP EMI	
FL804	1-233-893-21	FILTER, CHIP EMI	
FL805	1-233-893-21	FILTER, CHIP EMI	
FL806	1-233-893-21	FILTER, CHIP EMI	
FL807	1-233-893-21	FILTER, CHIP EMI	
FL808	1-233-893-21	FILTER, CHIP EMI	
		< IC >	
IC201	8-759-463-47	IC MB811171622A-100FN	
IC202	8-759-463-47	IC MB811171622A-100FN	
IC203	8-759-526-72	IC L64021-D-QC-27 (S315)	
IC203	8-759-526-71	IC L64020-D-QC-27 (S300/S305)	
IC204	8-759-531-92	IC TC7WH04FU(TE12R)	
IC205	8-759-456-81	IC SN74ABT126DB-E20	
IC206	8-759-456-81	IC SN74ABT126DB-E20	
IC207	8-759-522-16	IC MB90096PF-G-124-BND-ER (S305: Taiwan)	
IC207	8-759-522-14	IC MB90096PF-G-127-BND-ER (S300/S315)	
IC207	8-759-522-15	IC MB90096PF-G-123-BND-ER (S305: E, Chinese, Singapore)	
IC208	8-759-058-62	IC TC7S08FU(TE85R)	
IC209	8-759-522-10	IC CXD8696R-T2	
IC251	8-752-384-09	IC CXD1854Q (S305)	
IC252	8-752-379-07	IC CXD1914Q	
IC301	8-759-701-39	IC NJM3404AM	
IC302	8-759-384-55	IC LA6527N-TE-B	
IC303	8-759-333-63	IC LB1896-TE-B	
IC361	8-759-490-71	IC BA5912AFP-YE2	

Ref. No.	Part No.	Description	Remark
IC363	8-759-522-13	IC BA5981FP-E2	
IC452	8-759-441-31	IC MC14053BDTR2	
IC455	8-759-100-93	IC uPC393G2	
IC501	8-759-100-93	IC uPC393G2	
IC502	8-759-701-36	IC NJM3403AM(TE2)	
IC503	8-759-701-36	IC NJM3403AM(TE2)	
IC506	8-759-525-61	IC CXD8730R	
IC507	8-759-701-39	IC NJM3404AM	
IC508	8-759-701-39	IC NJM3404AM	
IC601	8-759-926-66	IC SN74HC373ANS	
IC602	8-759-082-55	IC TC7W00FU(TE12R)	
IC603	8-759-536-33	IC MSM27C401CZ-NTS-K (S315)	
IC604	8-759-426-60	IC MB90T678PF-G-BND	
IC605	8-759-434-20	IC PST572DML	
IC606	8-759-100-93	IC uPC393G2	
IC801	8-759-431-99	IC BR9020F-E2	
IC802	8-759-526-77	IC HM628128ALFP-5SL	
IC803	8-759-451-71	IC MBM29F800B-90PF	
IC804	8-759-525-66	IC CXD8728Q	
IC805	8-759-489-89	IC HD6437034AD49F	
IC806	8-759-522-09	IC CXD1865R	
IC807	8-759-526-79	IC CXD8747Q	
IC810	8-759-525-65	IC uPD424260ALG5-A70-7JF	
IC811	8-752-390-59	IC CXD1904Q	
IC812	8-759-486-55	IC NJM2370U33-TE2	
		< COIL >	
L001	1-409-529-41	INDUCTOR 0uH	
L002	1-409-529-41	INDUCTOR 0uH	
L004	1-409-529-41	INDUCTOR 0uH	
L005	1-409-529-41	INDUCTOR 0uH	
L006	1-409-529-41	INDUCTOR 0uH	
L007	1-409-529-41	INDUCTOR 0uH	
L205	1-414-751-11	INDUCTOR 1uH (S315)	
L205	1-412-939-11	INDUCTOR 1uH (S300/S305)	
		< TRANSISTOR >	
Q001	8-729-230-63	TRANSISTOR 2SC4116-YG	
Q002	8-729-044-78	TRANSISTOR 2SJ327-Z-E1	
Q371	8-729-015-76	TRANSISTOR UN5211-TX	
Q372	8-729-015-76	TRANSISTOR UN5211-TX	
Q452	8-729-023-22	TRANSISTOR 2SD2114KT146	
Q501	8-729-015-76	TRANSISTOR UN5211-TX	
Q601	8-729-216-22	TRANSISTOR 2SA1162 (S300: US)	
Q602	8-729-424-18	TRANSISTOR UN2113 (S300: US)	
		< RESISTOR >	
R001	1-216-827-11	METAL CHIP 3.3K 5% 1/16W	
R004	1-216-820-11	METAL CHIP 820 5% 1/16W	
R005	1-216-837-11	METAL CHIP 22K 5% 1/16W	
R008	1-216-833-11	METAL CHIP 10K 5% 1/16W	
R009	1-216-821-11	METAL CHIP 1K 5% 1/16W	
R022	1-216-864-11	METAL CHIP 0 5% 1/16W	
R024	1-216-864-11	METAL CHIP 0 5% 1/16W (S300/S305: Chinese, Taiwan)	
R025	1-216-864-11	METAL CHIP 0 5% 1/16W (S305: E, Singapore/S315)	

The components identified by mark ⚠ or dotted line with mark ⚠ are critical for safety.
Replace only with part number specified.

Ref. No.	Part No.	Description			Remark
R028	1-216-864-11	METAL CHIP	0	5%	1/16W
					(S300: US/S305: E, Singapore)
R029	1-216-864-11	METAL CHIP	0	5%	1/16W
					(S300: E/S315)
R030	1-216-864-11	METAL CHIP	0	5%	1/16W
					(S305: Chinese)
R031	1-216-864-11	METAL CHIP	0	5%	1/16W
					(S305: Taiwan)
R051	1-218-831-11	RES, CHIP	220	0.50%	1/16W
R052	1-218-831-11	RES, CHIP	220	0.50%	1/16W
R053	1-218-831-11	RES, CHIP	220	0.50%	1/16W
R054	1-218-831-11	RES, CHIP	220	0.50%	1/16W
R055	1-218-831-11	RES, CHIP	220	0.50%	1/16W
R056	1-218-831-11	RES, CHIP	220	0.50%	1/16W
R057	1-216-805-11	METAL CHIP	47	5%	1/16W
R086	1-216-295-91	SHORT	0	(S315)	
R138	1-216-864-11	METAL CHIP	0	5%	1/16W
R139	1-216-864-11	METAL CHIP	0	5%	1/16W
R144	1-216-864-11	METAL CHIP	0	5%	1/16W
R145	1-216-864-11	METAL CHIP	0	5%	1/16W
R146	1-216-864-11	METAL CHIP	0	5%	1/16W
R148	1-216-864-11	METAL CHIP	0	5%	1/16W
R149	1-216-864-11	METAL CHIP	0	5%	1/16W
R150	1-216-864-11	METAL CHIP	0	5%	1/16W
R151	1-216-065-91	RES, CHIP	4.7K	5%	1/10W
					(S315)
R151	1-216-864-11	METAL CHIP	0	5%	1/16W
R152	1-216-833-11	METAL CHIP	10K	5%	1/16W
R153	1-216-864-11	METAL CHIP	0	5%	1/16W
R155	1-216-864-11	METAL CHIP	0	5%	1/16W
R156	1-216-864-11	METAL CHIP	0	5%	1/16W
R157	1-216-864-11	METAL CHIP	0	5%	1/16W
R158	1-216-864-11	METAL CHIP	0	5%	1/16W
R159	1-216-864-11	METAL CHIP	0	5%	1/16W
R160	1-216-864-11	METAL CHIP	0	5%	1/16W
R161	1-216-864-11	METAL CHIP	0	5%	1/16W
R162	1-216-864-11	METAL CHIP	0	5%	1/16W
R163	1-216-864-11	METAL CHIP	0	5%	1/16W
R164	1-216-864-11	METAL CHIP	0	5%	1/16W
R165	1-216-864-11	METAL CHIP	0	5%	1/16W
R166	1-216-864-11	METAL CHIP	0	5%	1/16W
R167	1-216-864-11	METAL CHIP	0	5%	1/16W
R168	1-216-864-11	METAL CHIP	0	5%	1/16W
R169	1-216-864-11	METAL CHIP	0	5%	1/16W
R170	1-216-864-11	METAL CHIP	0	5%	1/16W
R171	1-216-864-11	METAL CHIP	0	5%	1/16W
R172	1-216-864-11	METAL CHIP	0	5%	1/16W
R173	1-216-864-11	METAL CHIP	0	5%	1/16W
R174	1-216-864-11	METAL CHIP	0	5%	1/16W
R175	1-216-864-11	METAL CHIP	0	5%	1/16W
R176	1-216-832-11	METAL CHIP	8.2K	5%	1/16W
R177	1-216-829-11	METAL CHIP	4.7K	5%	1/16W
R178	1-216-825-11	METAL CHIP	2.2K	5%	1/16W
R179	1-216-809-11	METAL CHIP	100	5%	1/16W
R180	1-216-864-11	METAL CHIP	0	5%	1/16W
R181	1-216-864-11	METAL CHIP	0	5%	1/16W
R194	1-216-805-11	METAL CHIP	47	5%	1/16W
R195	1-216-805-11	METAL CHIP	47	5%	1/16W
R196	1-216-805-11	METAL CHIP	47	5%	1/16W
R197	1-216-805-11	METAL CHIP	47	5%	1/16W
R198	1-216-805-11	METAL CHIP	47	5%	1/16W

Ref. No.	Part No.	Description			Remark
R199	1-216-805-11	METAL CHIP	47	5%	1/16W
R200	1-216-801-11	METAL CHIP	22	5%	1/16W
R202	1-216-805-11	METAL CHIP	47	5%	1/16W
R203	1-216-805-11	METAL CHIP	47	5%	1/16W
R204	1-216-805-11	METAL CHIP	47	5%	1/16W
R205	1-216-864-11	METAL CHIP	0	5%	1/16W
R207	1-216-805-11	METAL CHIP	47	5%	1/16W
R208	1-216-805-11	METAL CHIP	47	5%	1/16W
R209	1-216-805-11	METAL CHIP	47	5%	1/16W
R210	1-216-805-11	METAL CHIP	47	5%	1/16W
R211	1-216-805-11	METAL CHIP	47	5%	1/16W
R212	1-216-809-11	METAL CHIP	100	5%	1/16W
R213	1-216-809-11	METAL CHIP	100	5%	1/16W
R214	1-216-805-11	METAL CHIP	47	5%	1/16W
R215	1-216-805-11	METAL CHIP	47	5%	1/16W
R216	1-216-809-11	METAL CHIP	100	5%	1/16W
					(S315)
R216	1-216-805-11	METAL CHIP	47	5%	1/16W
					(S300/S305)
R218	1-216-805-11	METAL CHIP	47	5%	1/16W
R219	1-216-801-11	METAL CHIP	22	5%	1/16W
R220	1-216-801-11	METAL CHIP	22	5%	1/16W
R221	1-216-801-11	METAL CHIP	22	5%	1/16W
R222	1-216-813-11	METAL CHIP	220	5%	1/16W
					(S315)
R222	1-216-805-11	METAL CHIP	47	5%	1/16W
					(S300/S305)
R223	1-500-283-11	INDUCTOR CHIP	0UH	(S315)	
R223	1-216-805-11	METAL CHIP	47	5%	1/16W
					(S300/S305)
R224	1-216-805-11	METAL CHIP	47	5%	1/16W
R225	1-216-805-11	METAL CHIP	47	5%	1/16W
R226	1-216-805-11	METAL CHIP	47	5%	1/16W
R227	1-216-805-11	METAL CHIP	47	5%	1/16W
R228	1-216-805-11	METAL CHIP	47	5%	1/16W
R230	1-216-809-11	METAL CHIP	100	5%	1/16W
R231	1-216-809-11	METAL CHIP	100	5%	1/16W
R232	1-216-845-11	METAL CHIP	100K	5%	1/16W
R235	1-216-864-11	METAL CHIP	0	5%	1/16W
					(S300: E/S305: Chinese, Taiwan/S315)
R236	1-216-809-11	METAL CHIP	100	5%	1/16W
R237	1-216-809-11	METAL CHIP	100	5%	1/16W
					(S315)
R237	1-216-864-11	METAL CHIP	0	5%	1/16W
					(S300/S305)
R238	1-216-809-11	METAL CHIP	100	5%	1/16W
R238	1-216-864-11	METAL CHIP	0	5%	1/16W
					(S300: E/S305: Chinese, Taiwan)
R239	1-216-809-11	METAL CHIP	100	5%	1/16W
R240	1-216-805-11	METAL CHIP	47	5%	1/16W
R241	1-216-805-11	METAL CHIP	47	5%	1/16W
R242	1-216-864-11	METAL CHIP	0	5%	1/16W
R243	1-216-801-11	METAL CHIP	22	5%	1/16W
R244	1-216-809-11	METAL CHIP	100	5%	1/16W
R245	1-216-864-11	METAL CHIP	0	5%	1/16W
R246	1-216-864-11	METAL CHIP	0	5%	1/16W
R247	1-216-864-11	METAL CHIP	0	5%	1/16W
R248	1-216-864-11	METAL CHIP	0	5%	1/16W
R249	1-216-864-11	METAL CHIP	0	5%	1/16W
R250	1-216-809-11	METAL CHIP	100	5%	1/16W
R251	1-216-809-11	METAL CHIP	100	5%	1/16W
					(S305)

MB-78

Ref. No.	Part No.	Description			Remark
R252	1-216-821-11	METAL CHIP	1K	5%	1/16W (S305)
R253	1-216-801-11	METAL CHIP	22	5%	1/16W (S305)
R254	1-216-805-11	METAL CHIP	47	5%	1/16W (S305)
R255	1-216-805-11	METAL CHIP	47	5%	1/16W (S305)
R256	1-216-805-11	METAL CHIP	47	5%	1/16W (S305)
R257	1-216-805-11	METAL CHIP	47	5%	1/16W (S305)
R258	1-216-805-11	METAL CHIP	47	5%	1/16W (S305)
R259	1-216-805-11	METAL CHIP	47	5%	1/16W (S305)
R260	1-216-805-11	METAL CHIP	47	5%	1/16W (S305)
R261	1-216-805-11	METAL CHIP	47	5%	1/16W (S305)
R262	1-216-805-11	METAL CHIP	47	5%	1/16W (S305)
R263	1-216-805-11	METAL CHIP	47	5%	1/16W (S305)
R264	1-216-805-11	METAL CHIP	47	5%	1/16W (S305)
R265	1-216-805-11	METAL CHIP	47	5%	1/16W (S305)
R266	1-216-805-11	METAL CHIP	47	5%	1/16W (S305)
R267	1-216-805-11	METAL CHIP	47	5%	1/16W (S305)
R268	1-216-805-11	METAL CHIP	47	5%	1/16W (S305)
R269	1-216-805-11	METAL CHIP	47	5%	1/16W (S305)
R270	1-216-821-11	METAL CHIP	1K	5%	1/16W (S305)
R271	1-216-864-11	METAL CHIP	0	5%	1/16W (S300/S315)
R272	1-216-864-11	METAL CHIP	0	5%	1/16W (S300/S315)
R273	1-216-864-11	METAL CHIP	0	5%	1/16W (S300/S315)
R274	1-216-864-11	METAL CHIP	0	5%	1/16W (S300/S315)
R275	1-216-864-11	METAL CHIP	0	5%	1/16W (S300/S315)
R276	1-216-864-11	METAL CHIP	0	5%	1/16W (S300/S315)
R277	1-216-864-11	METAL CHIP	0	5%	1/16W (S300/S315)
R278	1-216-864-11	METAL CHIP	0	5%	1/16W (S300/S315)
R279	1-216-813-11	METAL CHIP	220	5%	1/16W (S315)
R279	1-216-801-11	METAL CHIP	22	5%	1/16W (S300/S305)
R280	1-216-809-11	METAL CHIP	100	5%	1/16W
R281	1-216-801-11	METAL CHIP	22	5%	1/16W
R282	1-216-801-11	METAL CHIP	22	5%	1/16W
R283	1-216-805-11	METAL CHIP	47	5%	1/16W
R284	1-216-805-11	METAL CHIP	47	5%	1/16W
R285	1-216-805-11	METAL CHIP	47	5%	1/16W
R286	1-216-827-11	METAL CHIP	3.3K	5%	1/16W

Ref. No.	Part No.	Description			Remark
R290	1-216-829-11	METAL CHIP	4.7K	5%	1/16W
R291	1-216-805-11	METAL CHIP	47	5%	1/16W
R292	1-216-833-11	METAL CHIP	10K	5%	1/16W (S315)
R295	1-216-825-11	METAL CHIP	2.2K	5%	1/16W (S315)
R296	1-216-809-11	METAL CHIP	100	5%	1/16W
R298	1-216-809-11	METAL CHIP	100	5%	1/16W
R301	1-216-833-11	METAL CHIP	10K	5%	1/16W
R302	1-216-845-11	METAL CHIP	100K	5%	1/16W
R304	1-216-841-11	METAL CHIP	47K	5%	1/16W
R305	1-216-839-11	METAL CHIP	33K	5%	1/16W
R306	1-216-833-11	METAL CHIP	10K	5%	1/16W
R307	1-216-853-11	METAL CHIP	470K	5%	1/16W
R308	1-216-845-11	METAL CHIP	100K	5%	1/16W
R309	1-216-833-11	METAL CHIP	10K	5%	1/16W
R313	1-216-833-11	METAL CHIP	10K	5%	1/16W
R314	1-216-821-11	METAL CHIP	1K	5%	1/16W
R315	1-216-837-11	METAL CHIP	22K	5%	1/16W
R316	1-216-818-11	METAL CHIP	560	5%	1/16W
R317	1-216-843-11	METAL CHIP	68K	5%	1/16W
R318	1-216-817-11	METAL CHIP	470	5%	1/16W
R319	1-216-851-11	METAL CHIP	330K	5%	1/16W
R320	1-216-817-11	METAL CHIP	470	5%	1/16W
R321	1-216-845-11	METAL CHIP	100K	5%	1/16W
R322	1-218-851-11	RES, CHIP	1.5K	0.50%	1/16W
R324	1-216-817-11	METAL CHIP	470	5%	1/16W
R325	1-216-821-11	METAL CHIP	1K	5%	1/16W
R326	1-216-821-11	METAL CHIP	1K	5%	1/16W
R327	1-216-821-11	METAL CHIP	1K	5%	1/16W
R328	1-216-821-11	METAL CHIP	1K	5%	1/16W
R329	1-216-855-11	METAL CHIP	680K	5%	1/16W
R331	1-216-821-11	METAL CHIP	1K	5%	1/16W
R332	1-218-871-11	RES, CHIP	10K	0.50%	1/16W
R333	1-216-864-11	METAL CHIP	0	5%	1/16W (S300: E/S305: Chinese, Taiwan/S315)
R334	1-216-821-11	METAL CHIP	1K	5%	1/16W
R335	1-216-849-11	METAL CHIP	220K	5%	1/16W
R336	1-216-849-11	METAL CHIP	220K	5%	1/16W
R338	1-216-845-11	METAL CHIP	100K	5%	1/16W
R339	1-218-859-11	RES, CHIP	3.3K	0.50%	1/16W
R340	1-218-855-11	RES, CHIP	2.2K	0.50%	1/16W
R341	1-216-789-11	METAL CHIP	2.2	5%	1/16W
R342	1-216-789-11	METAL CHIP	2.2	5%	1/16W
R343	1-216-789-11	METAL CHIP	2.2	5%	1/16W
R344	1-216-789-11	METAL CHIP	2.2	5%	1/16W
R345	1-216-797-11	METAL CHIP	10	5%	1/16W
R346	1-216-798-11	RES, CHIP	12	5%	1/16W
R347	1-218-859-11	RES, CHIP	3.3K	0.50%	1/16W
R348	1-218-863-11	RES, CHIP	4.7K	0.50%	1/16W
R349	1-218-859-11	RES, CHIP	3.3K	0.50%	1/16W
R350	1-218-863-11	RES, CHIP	4.7K	0.50%	1/16W
R351	1-216-797-11	METAL CHIP	10	5%	1/16W
R352	1-216-798-11	RES, CHIP	12	5%	1/16W
R353	1-216-798-11	RES, CHIP	12	5%	1/16W
R354	1-216-821-11	METAL CHIP	1K	5%	1/16W
R355	1-216-823-11	METAL CHIP	1.5K	5%	1/16W
R356	1-216-833-11	METAL CHIP	10K	5%	1/16W
R357	1-216-837-11	METAL CHIP	22K	5%	1/16W
R360	1-216-817-11	METAL CHIP	470	5%	1/16W
R361	1-216-864-11	METAL CHIP	0	5%	1/16W

Ref. No.	Part No.	Description			Remark
R362	1-216-821-11	METAL CHIP	1K	5%	1/16W
					(S300: E/S305: Chinese, Taiwan)
R362	1-216-833-11	METAL CHIP	10K	5%	1/16W
R363	1-216-833-11	METAL CHIP	10K	5%	1/16W
R365	1-216-841-11	METAL CHIP	47K	5%	1/16W
R366	1-216-833-11	METAL CHIP	10K	5%	1/16W
R367	1-216-841-11	METAL CHIP	47K	5%	1/16W
R368	1-216-837-11	METAL CHIP	22K	5%	1/16W
R369	1-216-833-11	METAL CHIP	10K	5%	1/16W
R371	1-216-864-11	METAL CHIP	0	5%	1/16W
R372	1-216-864-11	METAL CHIP	0	5%	1/16W
R375	1-216-797-11	METAL CHIP	10	5%	1/16W
R376	1-216-797-11	METAL CHIP	10	5%	1/16W
R377	1-216-797-11	METAL CHIP	10	5%	1/16W
R378	1-216-797-11	METAL CHIP	10	5%	1/16W
R385	1-216-864-11	METAL CHIP	0	5%	1/16W
R386	1-216-864-11	METAL CHIP	0	5%	1/16W
R387	1-216-864-11	METAL CHIP	0	5%	1/16W
R388	1-216-864-11	METAL CHIP	0	5%	1/16W
R393	1-216-797-11	METAL CHIP	10	5%	1/16W
R394	1-216-797-11	METAL CHIP	10	5%	1/16W
R395	1-216-797-11	METAL CHIP	10	5%	1/16W
R396	1-216-797-11	METAL CHIP	10	5%	1/16W
R397	1-216-837-11	METAL CHIP	22K	5%	1/16W
R398	1-216-837-11	METAL CHIP	22K	5%	1/16W
R399	1-216-797-11	METAL CHIP	10	5%	1/16W
R400	1-216-797-11	METAL CHIP	10	5%	1/16W
R401	1-216-797-11	METAL CHIP	10	5%	1/16W
R402	1-216-797-11	METAL CHIP	10	5%	1/16W
R403	1-218-446-11	METAL CHIP	1	5%	1/16W
R404	1-218-446-11	METAL CHIP	1	5%	1/16W
R405	1-218-446-11	METAL CHIP	1	5%	1/16W
R406	1-218-446-11	METAL CHIP	1	5%	1/16W
R407	1-216-134-00	METAL CHIP	2.2	5%	1/8W
R408	1-216-134-00	METAL CHIP	2.2	5%	1/8W
R409	1-216-134-00	METAL CHIP	2.2	5%	1/8W
R410	1-216-134-00	METAL CHIP	2.2	5%	1/8W
R411	1-216-835-11	METAL CHIP	15K	5%	1/16W
R412	1-216-835-11	METAL CHIP	15K	5%	1/16W
R413	1-216-844-11	METAL CHIP	82K	5%	1/16W
R414	1-216-844-11	METAL CHIP	82K	5%	1/16W
R415	1-216-837-11	METAL CHIP	22K	5%	1/16W
R416	1-216-837-11	METAL CHIP	22K	5%	1/16W
R417	1-216-833-11	METAL CHIP	10K	5%	1/16W
R418	1-216-833-11	METAL CHIP	10K	5%	1/16W
R419	1-216-838-11	METAL CHIP	27K	5%	1/16W
R420	1-216-829-11	METAL CHIP	4.7K	5%	1/16W
R421	1-216-836-11	METAL CHIP	18K	5%	1/16W
R422	1-216-836-11	METAL CHIP	18K	5%	1/16W
R423	1-216-833-11	METAL CHIP	10K	5%	1/16W
R424	1-216-841-11	METAL CHIP	47K	5%	1/16W
R425	1-216-825-11	METAL CHIP	2.2K	5%	1/16W
R426	1-216-825-11	METAL CHIP	2.2K	5%	1/16W
R427	1-216-825-11	METAL CHIP	2.2K	5%	1/16W
R428	1-216-825-11	METAL CHIP	2.2K	5%	1/16W
R459	1-216-864-11	METAL CHIP	0	5%	1/16W
R460	1-216-809-11	METAL CHIP	100	5%	1/16W
R486	1-216-821-11	METAL CHIP	1K	5%	1/16W
R487	1-216-821-11	METAL CHIP	1K	5%	1/16W
R488	1-216-857-11	METAL CHIP	1M	5%	1/16W

Ref. No.	Part No.	Description			Remark
R489	1-216-819-11	METAL CHIP	680	5%	1/16W
R490	1-216-839-11	METAL CHIP	33K	5%	1/16W
R491	1-216-833-11	METAL CHIP	10K	5%	1/16W
R492	1-216-839-11	METAL CHIP	33K	5%	1/16W
R493	1-216-833-11	METAL CHIP	10K	5%	1/16W
R494	1-216-819-11	METAL CHIP	680	5%	1/16W
R495	1-216-857-11	METAL CHIP	1M	5%	1/16W
R501	1-216-831-11	METAL CHIP	6.8K	5%	1/16W
R503	1-216-825-11	METAL CHIP	2.2K	5%	1/16W
R508	1-216-829-11	METAL CHIP	4.7K	5%	1/16W
R509	1-216-833-11	METAL CHIP	10K	5%	1/16W
R510	1-216-821-11	METAL CHIP	1K	5%	1/16W
R511	1-216-833-11	METAL CHIP	10K	5%	1/16W
R512	1-216-833-11	METAL CHIP	10K	5%	1/16W
R514	1-216-864-11	METAL CHIP	0	5%	1/16W
R515	1-216-809-11	METAL CHIP	100	5%	1/16W
R516	1-216-837-11	METAL CHIP	22K	5%	1/16W
R517	1-216-825-11	METAL CHIP	2.2K	5%	1/16W
R518	1-216-864-11	METAL CHIP	0	5%	1/16W
R519	1-216-825-11	METAL CHIP	2.2K	5%	1/16W
R520	1-216-825-11	METAL CHIP	2.2K	5%	1/16W
R521	1-216-821-11	METAL CHIP	1K	5%	1/16W
R522	1-216-821-11	METAL CHIP	1K	5%	1/16W
R523	1-216-846-11	METAL CHIP	120K	5%	1/16W
R524	1-216-833-11	METAL CHIP	10K	5%	1/16W
R525	1-216-809-11	METAL CHIP	100	5%	1/16W
R526	1-216-825-11	METAL CHIP	2.2K	5%	1/16W
R527	1-216-864-11	METAL CHIP	0	5%	1/16W
					(S315)
R527	1-216-825-11	METAL CHIP	2.2K	5%	1/16W
					(S300/S305)
R528	1-216-825-11	METAL CHIP	2.2K	5%	1/16W
R529	1-216-834-11	METAL CHIP	12K	5%	1/16W
R530	1-216-837-11	METAL CHIP	22K	5%	1/16W
R531	1-216-833-11	METAL CHIP	10K	5%	1/16W
R532	1-216-833-11	METAL CHIP	10K	5%	1/16W
R533	1-216-845-11	METAL CHIP	100K	5%	1/16W
R534	1-216-833-11	METAL CHIP	10K	5%	1/16W
R535	1-216-829-11	METAL CHIP	4.7K	5%	1/16W
R536	1-216-845-11	METAL CHIP	100K	5%	1/16W
R537	1-216-845-11	METAL CHIP	100K	5%	1/16W
R539	1-216-864-11	METAL CHIP	0	5%	1/16W
R540	1-216-864-11	METAL CHIP	0	5%	1/16W
R541	1-216-845-11	METAL CHIP	100K	5%	1/16W
R542	1-216-841-11	METAL CHIP	47K	5%	1/16W
R543	1-216-821-11	METAL CHIP	1K	5%	1/16W
R544	1-216-827-11	METAL CHIP	3.3K	5%	1/16W
R545	1-218-847-11	RES, CHIP	1K	0.50%	1/16W
R546	1-216-797-11	METAL CHIP	10	5%	1/16W
R547	1-216-797-11	METAL CHIP	10	5%	1/16W
R548	1-216-864-11	METAL CHIP	0	5%	1/16W
R550	1-216-809-11	METAL CHIP	100	5%	1/16W
R551	1-218-847-11	RES, CHIP	1K	0.50%	1/16W
R552	1-216-809-11	METAL CHIP	100	5%	1/16W
R553	1-216-809-11	METAL CHIP	100	5%	1/16W
R554	1-216-809-11	METAL CHIP	100	5%	1/16W
R555	1-216-809-11	METAL CHIP	100	5%	1/16W
R556	1-216-829-11	METAL CHIP	4.7K	5%	1/16W
R557	1-216-809-11	METAL CHIP	100	5%	1/16W
R558	1-216-829-11	METAL CHIP	4.7K	5%	1/16W

Ref. No.	Part No.	Description			Remark
R559	1-216-809-11	METAL CHIP	100	5%	1/16W
R560	1-218-847-11	RES, CHIP	1K	0.50%	1/16W
R561	1-216-837-11	METAL CHIP	22K	5%	1/16W
R562	1-216-864-11	METAL CHIP	0	5%	1/16W
R563	1-216-833-11	METAL CHIP	10K	5%	1/16W
R564	1-216-827-11	METAL CHIP	3.3K	5%	1/16W
R565	1-216-833-11	METAL CHIP	10K	5%	1/16W
R566	1-216-827-11	METAL CHIP	3.3K	5%	1/16W
R567	1-216-809-11	METAL CHIP	100	5%	1/16W
R568	1-216-809-11	METAL CHIP	100	5%	1/16W
R569	1-216-809-11	METAL CHIP	100	5%	1/16W
R570	1-216-809-11	METAL CHIP	100	5%	1/16W
R571	1-216-809-11	METAL CHIP	100	5%	1/16W
R572	1-216-809-11	METAL CHIP	100	5%	1/16W
R573	1-216-809-11	METAL CHIP	100	5%	1/16W
R574	1-216-809-11	METAL CHIP	100	5%	1/16W
R575	1-216-821-11	METAL CHIP	1K	5%	1/16W
R576	1-216-853-11	METAL CHIP	470K	5%	1/16W
R577	1-216-853-11	METAL CHIP	470K	5%	1/16W
R578	1-218-847-11	RES, CHIP	1K	0.50%	1/16W
R579	1-216-835-11	METAL CHIP	15K	5%	1/16W
R580	1-216-809-11	METAL CHIP	100	5%	1/16W
R582	1-216-864-11	METAL CHIP	0	5%	1/16W
R583	1-216-809-11	METAL CHIP	100	5%	1/16W
R584	1-216-809-11	METAL CHIP	100	5%	1/16W
R585	1-216-821-11	METAL CHIP	1K	5%	1/16W
R586	1-216-833-11	METAL CHIP	10K	5%	1/16W
R587	1-216-809-11	METAL CHIP	100	5%	1/16W
R588	1-216-809-11	METAL CHIP	100	5%	1/16W
R592	1-216-845-11	METAL CHIP	100K	5%	1/16W
R593	1-216-835-11	METAL CHIP	15K	5%	1/16W
R594	1-216-857-11	METAL CHIP	1M	5%	1/16W
R595	1-216-833-11	METAL CHIP	10K	5%	1/16W
R596	1-216-839-11	METAL CHIP	33K	5%	1/16W
R597	1-216-827-11	METAL CHIP	3.3K	5%	1/16W
R598	1-216-821-11	METAL CHIP	1K	5%	1/16W
R601	1-216-833-11	METAL CHIP	10K	5%	1/16W
R602	1-216-833-11	METAL CHIP	10K	5%	1/16W
R605	1-216-845-11	METAL CHIP	100K	5%	1/16W
R607	1-216-833-11	METAL CHIP	10K	5%	1/16W
R610	1-216-833-11	METAL CHIP	10K	5%	1/16W
R612	1-216-864-11	METAL CHIP	0	5%	1/16W
R613	1-216-833-11	METAL CHIP	10K	5%	1/16W
R614	1-216-833-11	METAL CHIP	10K	5%	1/16W
R615	1-216-833-11	METAL CHIP	10K	5%	1/16W
R616	1-218-871-11	RES, CHIP	10K	0.50%	1/16W
R617	1-218-871-11	RES, CHIP	10K	0.50%	1/16W
R618	1-218-871-11	RES, CHIP	10K	0.50%	1/16W
R619	1-218-871-11	RES, CHIP	10K	0.50%	1/16W
R620	1-218-871-11	RES, CHIP	10K	0.50%	1/16W
R622	1-216-864-11	METAL CHIP	0	5%	1/16W
R626	1-218-871-11	RES, CHIP	10K	0.50%	1/16W
R628	1-216-864-11	METAL CHIP	0	5%	1/16W
R630	1-216-821-11	METAL CHIP	1K	5%	1/16W
R631	1-216-821-11	METAL CHIP	1K	5%	1/16W
R632	1-216-833-11	METAL CHIP	10K	5%	1/16W
R633	1-216-809-11	METAL CHIP	100	5%	1/16W
R634	1-216-833-11	METAL CHIP	10K	5%	1/16W
R635	1-216-809-11	METAL CHIP	100	5%	1/16W
R636	1-216-821-11	METAL CHIP	1K	5%	1/16W

Ref. No.	Part No.	Description			Remark
R637	1-216-833-11	METAL CHIP	10K	5%	1/16W
					(S300: US/S305: E, Taiwan, Singapore)
R638	1-216-833-11	METAL CHIP	10K	5%	1/16W
R640	1-216-833-11	METAL CHIP	10K	5%	1/16W
R641	1-216-833-11	METAL CHIP	10K	5%	1/16W
R642	1-216-833-11	METAL CHIP	10K	5%	1/16W
					(S305/S315)
R643	1-216-833-11	METAL CHIP	10K	5%	1/16W
R644	1-216-833-11	METAL CHIP	10K	5%	1/16W
					(S315)
R645	1-216-833-11	METAL CHIP	10K	5%	1/16W
R646	1-216-833-11	METAL CHIP	10K	5%	1/16W
					(S300: E/S305: Chinese)
R647	1-216-833-11	METAL CHIP	10K	5%	1/16W
R648	1-216-833-11	METAL CHIP	10K	5%	1/16W
					(S305: E, Singapore)
R649	1-216-821-11	METAL CHIP	1K	5%	1/16W
R650	1-216-833-11	METAL CHIP	10K	5%	1/16W
R651	1-216-833-11	METAL CHIP	10K	5%	1/16W
					(S305: Chinese, Taiwan)
R652	1-216-833-11	METAL CHIP	10K	5%	1/16W
R653	1-216-833-11	METAL CHIP	10K	5%	1/16W
					(S300: US/S305: E, Taiwan, Singapore/S315)
R654	1-216-833-11	METAL CHIP	10K	5%	1/16W
					(S300)
R655	1-216-833-11	METAL CHIP	10K	5%	1/16W
					(S300: E/S305: Chinese/S315)
R658	1-216-833-11	METAL CHIP	10K	5%	1/16W
					(S300: E/S305: Taiwan)
R660	1-216-833-11	METAL CHIP	10K	5%	1/16W
R661	1-216-833-11	METAL CHIP	10K	5%	1/16W
					(S300/S305)
R662	1-216-833-11	METAL CHIP	10K	5%	1/16W
					(S300/S305: Chinese, Taiwan/S315)
R663	1-216-833-11	METAL CHIP	10K	5%	1/16W
					(S300/S305: E, Singapore/S315)
R664	1-216-833-11	METAL CHIP	10K	5%	1/16W
					(S300: US/S305: E, Chinese, Singapore/S315)
R665	1-216-833-11	METAL CHIP	10K	5%	1/16W
R666	1-216-821-11	METAL CHIP	1K	5%	1/16W
R668	1-216-833-11	METAL CHIP	10K	5%	1/16W
R669	1-216-829-11	METAL CHIP	4.7K	5%	1/16W
R670	1-216-825-11	METAL CHIP	2.2K	5%	1/16W
					(S300: US)
R672	1-216-833-11	METAL CHIP	10K	5%	1/16W
R674	1-216-809-11	METAL CHIP	100	5%	1/16W
R675	1-216-837-11	METAL CHIP	22K	5%	1/16W
R676	1-216-809-11	METAL CHIP	100	5%	1/16W
R677	1-216-809-11	METAL CHIP	100	5%	1/16W
R678	1-216-809-11	METAL CHIP	100	5%	1/16W
R679	1-216-809-11	METAL CHIP	100	5%	1/16W
R680	1-216-809-11	METAL CHIP	100	5%	1/16W
R681	1-216-809-11	METAL CHIP	100	5%	1/16W
R682	1-216-809-11	METAL CHIP	100	5%	1/16W
R683	1-216-864-11	METAL CHIP	0	5%	1/16W
R688	1-216-837-11	METAL CHIP	22K	5%	1/16W
					(S300: US)
R689	1-216-801-11	METAL CHIP	22	5%	1/16W
R690	1-216-801-11	METAL CHIP	22	5%	1/16W
R691	1-216-801-11	METAL CHIP	22	5%	1/16W
R692	1-216-801-11	METAL CHIP	22	5%	1/16W
R693	1-216-821-11	METAL CHIP	1K	5%	1/16W
					(S300: US)

Ref. No.	Part No.	Description				Remark
R694	1-216-833-11	METAL CHIP	10K	5%	1/16W	(S300: US)
R695	1-216-864-11	METAL CHIP	0	5%	1/16W	(S300: E/S305/S315)
R696	1-216-841-11	METAL CHIP	47K	5%	1/16W	
R797	1-216-864-11	METAL CHIP	0	5%	1/16W	
R798	1-216-864-11	METAL CHIP	0	5%	1/16W	
R801	1-216-809-11	METAL CHIP	100	5%	1/16W	
R802	1-216-833-11	METAL CHIP	10K	5%	1/16W	
R803	1-216-833-11	METAL CHIP	10K	5%	1/16W	
R804	1-216-833-11	METAL CHIP	10K	5%	1/16W	
R805	1-216-833-11	METAL CHIP	10K	5%	1/16W	
R806	1-216-833-11	METAL CHIP	10K	5%	1/16W	(S300: E/S305: Taiwan)
R807	1-216-833-11	METAL CHIP	10K	5%	1/16W	(S305: Chinese, Taiwan)
R808	1-216-833-11	METAL CHIP	10K	5%	1/16W	(S305: E, Singapore)
R809	1-216-833-11	METAL CHIP	10K	5%	1/16W	(S315)
R811	1-216-833-11	METAL CHIP	10K	5%	1/16W	
R812	1-216-833-11	METAL CHIP	10K	5%	1/16W	
R813	1-216-833-11	METAL CHIP	10K	5%	1/16W	
R815	1-216-864-11	METAL CHIP	0	5%	1/16W	
R816	1-216-833-11	METAL CHIP	10K	5%	1/16W	
R817	1-216-833-11	METAL CHIP	10K	5%	1/16W	
R818	1-216-833-11	METAL CHIP	10K	5%	1/16W	
R819	1-216-833-11	METAL CHIP	10K	5%	1/16W	
R820	1-216-833-11	METAL CHIP	10K	5%	1/16W	
R821	1-216-833-11	METAL CHIP	10K	5%	1/16W	
R822	1-216-797-11	METAL CHIP	10	5%	1/16W	
R824	1-216-797-11	METAL CHIP	10	5%	1/16W	
R825	1-216-809-11	METAL CHIP	100	5%	1/16W	
R826	1-216-797-11	METAL CHIP	10	5%	1/16W	
R827	1-216-797-11	METAL CHIP	10	5%	1/16W	
R828	1-216-805-11	METAL CHIP	47	5%	1/16W	
R829	1-216-864-11	METAL CHIP	0	5%	1/16W	
R830	1-216-864-11	METAL CHIP	0	5%	1/16W	
R831	1-216-864-11	METAL CHIP	0	5%	1/16W	
R832	1-216-805-11	METAL CHIP	47	5%	1/16W	
R834	1-216-809-11	METAL CHIP	100	5%	1/16W	
R835	1-216-809-11	METAL CHIP	100	5%	1/16W	
R836	1-216-809-11	METAL CHIP	100	5%	1/16W	
R837	1-216-809-11	METAL CHIP	100	5%	1/16W	
R838	1-216-833-11	METAL CHIP	10K	5%	1/16W	
R839	1-216-857-11	METAL CHIP	1M	5%	1/16W	
R840	1-216-864-11	METAL CHIP	0	5%	1/16W	
R842	1-216-801-11	METAL CHIP	22	5%	1/16W	
R843	1-218-881-11	RES, CHIP	27K	0.50%	1/16W	
R844	1-218-847-11	RES, CHIP	1K	0.50%	1/16W	
R845	1-218-885-11	RES, CHIP	39K	0.50%	1/16W	
R847	1-216-833-11	METAL CHIP	10K	5%	1/16W	
R848	1-216-864-11	METAL CHIP	0	5%	1/16W	(S300: E/S305: Chinese, Taiwan/S315)
R848	1-216-801-11	METAL CHIP	22	5%	1/16W	(S300: US/S305: E, Singapore)
R849	1-218-831-11	RES, CHIP	220	0.50%	1/16W	
R850	1-218-853-11	RES, CHIP	1.8K	0.50%	1/16W	
R851	1-218-855-11	RES, CHIP	2.2K	0.50%	1/16W	
R852	1-218-871-11	RES, CHIP	10K	0.50%	1/16W	
R853	1-218-871-11	RES, CHIP	10K	0.50%	1/16W	
R854	1-216-809-11	METAL CHIP	100	5%	1/16W	

Ref. No.	Part No.	Description				Remark
R855	1-216-833-11	METAL CHIP	10K	5%	1/16W	
R856	1-216-837-11	METAL CHIP	22K	5%	1/16W	
R857	1-216-825-11	METAL CHIP	2.2K	5%	1/16W	
R858	1-216-838-11	METAL CHIP	27K	5%	1/16W	
R859	1-216-825-11	METAL CHIP	2.2K	5%	1/16W	
R860	1-216-821-11	METAL CHIP	1K	5%	1/16W	
R861	1-216-833-11	METAL CHIP	10K	5%	1/16W	
R862	1-216-833-11	METAL CHIP	10K	5%	1/16W	
R863	1-216-809-11	METAL CHIP	100	5%	1/16W	
R864	1-216-809-11	METAL CHIP	100	5%	1/16W	
R865	1-216-809-11	METAL CHIP	100	5%	1/16W	
R868	1-216-864-11	METAL CHIP	0	5%	1/16W	
R869	1-216-864-11	METAL CHIP	0	5%	1/16W	
R870	1-216-864-11	METAL CHIP	0	5%	1/16W	
R871	1-216-833-11	METAL CHIP	10K	5%	1/16W	
R872	1-216-809-11	METAL CHIP	100	5%	1/16W	
R873	1-216-809-11	METAL CHIP	100	5%	1/16W	
R874	1-216-809-11	METAL CHIP	100	5%	1/16W	
R875	1-216-809-11	METAL CHIP	100	5%	1/16W	
R876	1-216-809-11	METAL CHIP	100	5%	1/16W	
R877	1-216-809-11	METAL CHIP	100	5%	1/16W	
R878	1-216-833-11	METAL CHIP	10K	5%	1/16W	
R880	1-216-864-11	METAL CHIP	0	5%	1/16W	
R882	1-216-864-11	METAL CHIP	0	5%	1/16W	
R883	1-216-864-11	METAL CHIP	0	5%	1/16W	
R884	1-216-833-11	METAL CHIP	10K	5%	1/16W	
R885	1-216-864-11	METAL CHIP	0	5%	1/16W	
R889	1-216-833-11	METAL CHIP	10K	5%	1/16W	
R890	1-216-833-11	METAL CHIP	10K	5%	1/16W	
R891	1-216-833-11	METAL CHIP	10K	5%	1/16W	
R892	1-216-833-11	METAL CHIP	10K	5%	1/16W	
R897	1-216-864-11	METAL CHIP	0	5%	1/16W	
R898	1-216-864-11	METAL CHIP	0	5%	1/16W	
R899	1-216-864-11	METAL CHIP	0	5%	1/16W	
R900	1-216-864-11	METAL CHIP	0	5%	1/16W	
R901	1-216-864-11	METAL CHIP	0	5%	1/16W	
R907	1-216-864-11	METAL CHIP	0	5%	1/16W	
R908	1-216-833-11	METAL CHIP	10K	5%	1/16W	
R911	1-216-809-11	METAL CHIP	100	5%	1/16W	
R912	1-216-825-11	METAL CHIP	2.2K	5%	1/16W	
R913	1-216-833-11	METAL CHIP	10K	5%	1/16W	(S300: US/S305: E, Chinese, Singapore/S315)
R914	1-216-833-11	METAL CHIP	10K	5%	1/16W	(S300/S305: E, Singapore/S315)
R915	1-216-833-11	METAL CHIP	10K	5%	1/16W	(S300/S305: Chinese, Taiwan/S315)
R916	1-216-833-11	METAL CHIP	10K	5%	1/16W	(S300/S305)
R917	1-216-833-11	METAL CHIP	10K	5%	1/16W	
R919	1-216-809-11	METAL CHIP	100	5%	1/16W	
R920	1-216-809-11	METAL CHIP	100	5%	1/16W	
R921	1-216-809-11	METAL CHIP	100	5%	1/16W	
R922	1-216-817-11	METAL CHIP	470	5%	1/16W	(S315)
R922	1-216-809-11	METAL CHIP	100	5%	1/16W	(S300/S305)
R923	1-216-833-11	METAL CHIP	10K	5%	1/16W	
R924	1-218-289-11	RES, CHIP	510	5%	1/16W	
R926	1-216-864-11	METAL CHIP	0	5%	1/16W	
R927	1-216-864-11	METAL CHIP	0	5%	1/16W	
R929	1-216-864-11	METAL CHIP	0	5%	1/16W	

MB-78 ME-15 POWER BLOCK (HS-930)

Ref. No.	Part No.	Description			Remark
R930	1-216-864-11	METAL CHIP	0	5%	1/16W
R932	1-216-809-11	METAL CHIP	100	5%	1/16W
		< VARIABLE RESISTOR >			
RV251	1-238-663-11	RES, ADJ, CARBON 4.7K			
		< VIBRATOR >			
X201	1-767-860-21	VIBRATOR, CRYSTAL (27MHz)			
X601	1-767-359-11	VIBRATOR, CERAMIC (4MHz)			
X801	1-767-861-21	VIBRATOR, CRYSTAL (20MHz)			

Ref. No.	Part No.	Description			Remark
*	A-6065-097-A	ME-15 BOARD, COMPLETE (S305)			
		**********************			
					(Ref.No.2,000 Series)
		< CAPACITOR >			
C802	1-163-017-00	CERAMIC CHIP	0.0047uF	5%	50V
C803	1-124-248-00	ELECT	22uF	20%	35V
C804	1-163-135-00	CERAMIC CHIP	560PF	5%	50V
C805	1-107-823-11	CERAMIC CHIP	0.47uF	10%	16V
C806	1-164-232-11	CERAMIC CHIP	0.01uF		50V
C807	1-164-232-11	CERAMIC CHIP	0.01uF		50V
C808	1-126-967-11	ELECT	47uF	20%	16V
C809	1-126-967-11	ELECT	47uF	20%	16V
C810	1-124-248-00	ELECT	22uF	20%	35V
C811	1-124-248-00	ELECT	22uF	20%	35V
C812	1-124-248-00	ELECT	22uF	20%	35V
C813	1-163-259-91	CERAMIC CHIP	220PF	5%	50V
C814	1-163-243-11	CERAMIC CHIP	47PF	5%	50V
C815	1-164-232-11	CERAMIC CHIP	0.01uF		50V
C817	1-124-248-00	ELECT	22uF	20%	35V
C818	1-164-232-11	CERAMIC CHIP	0.01uF		50V
C819	1-164-232-11	CERAMIC CHIP	0.01uF		50V
C820	1-164-004-11	CERAMIC CHIP	0.1uF	10%	25V
C821	1-164-182-11	CERAMIC CHIP	0.0033uF	10%	50V
C822	1-164-182-11	CERAMIC CHIP	0.0033uF	10%	50V
C823	1-163-989-11	CERAMIC CHIP	0.033uF	10%	25V
C824	1-164-232-11	CERAMIC CHIP	0.01uF		50V
C826	1-164-232-11	CERAMIC CHIP	0.01uF		50V
C827	1-164-232-11	CERAMIC CHIP	0.01uF		50V
C829	1-164-232-11	CERAMIC CHIP	0.01uF		50V
		< CONNECTOR >			
CN801	1-506-484-11	PIN, CONNECTOR 5P			
		< DIODE >			
D802	8-719-105-99	DIODE RD6.2M-B1			
		< FERRITE BEAD >			
FB801	1-414-135-11	INDUCTOR CHIP 0UH			
FB802	1-414-135-11	INDUCTOR CHIP 0UH			
FB803	1-414-135-11	INDUCTOR CHIP 0UH			
		< IC >			
IC801	8-759-369-74	IC NJM4556AM-TE2			
IC802	8-759-453-78	IC BU9253FS-E2			
IC803	8-759-100-96	IC uPC4558G2			
		< JACK >			
J801	1-507-854-00	JACK, PHONE (MIC)			
		< COIL >			
L801	1-414-934-21	INDUCTOR	10uH		
		< TRANSISTOR >			
Q802	8-729-023-22	TRANSISTOR 2SD2114KT146			
Q803	8-729-421-19	TRANSISTOR UN2213			
Q804	8-729-424-18	TRANSISTOR UN2113			
		< RESISTOR >			
R801	1-216-025-91	RES, CHIP	100	5%	1/10W
R802	1-216-097-91	RES, CHIP	100K	5%	1/10W
R803	1-216-097-91	RES, CHIP	100K	5%	1/10W
R804	1-216-089-91	RES, CHIP	47K	5%	1/10W
R805	1-216-049-91	RES, CHIP	1K	5%	1/10W
R806	1-216-073-00	METAL CHIP	10K	5%	1/10W
R807	1-216-073-00	METAL CHIP	10K	5%	1/10W
R808	1-216-097-91	RES, CHIP	100K	5%	1/10W
R809	1-216-041-00	METAL CHIP	470	5%	1/10W
R810	1-216-041-00	METAL CHIP	470	5%	1/10W
R811	1-216-081-00	METAL CHIP	22K	5%	1/10W
R812	1-216-073-00	METAL CHIP	10K	5%	1/10W
R813	1-216-073-00	METAL CHIP	10K	5%	1/10W
R814	1-216-065-91	RES, CHIP	4.7K	5%	1/10W
R815	1-216-077-00	METAL CHIP	15K	5%	1/10W
R816	1-216-071-00	METAL CHIP	8.2K	5%	1/10W
R817	1-216-079-00	METAL CHIP	18K	5%	1/10W
R818	1-216-079-00	METAL CHIP	18K	5%	1/10W
R819	1-216-057-00	METAL CHIP	2.2K	5%	1/10W
R820	1-216-089-91	RES, CHIP	47K	5%	1/10W
R821	1-216-073-00	METAL CHIP	10K	5%	1/10W
R822	1-216-295-91	SHORT	0		
R824	1-216-033-00	METAL CHIP	220	5%	1/10W
R825	1-216-049-91	RES, CHIP	1K	5%	1/10W
R826	1-216-089-91	RES, CHIP	47K	5%	1/10W
R830	1-216-295-91	SHORT	0		
		< VARIABLE RESISTOR >			
RV801	1-223-190-11	RES, VAR, CARBON 10K/10K (LEVEL)			

Ref. No.	Part No.	Description			Remark
*	1-468-287-12	POWER BLOCK(HS-930SU) (S300: US)			
*	1-468-287-21	POWER BLOCK(HS-930SH)			
					(S315/S305: Chinese, Singapore)
*	1-468-287-31	POWER BLOCK(HS-930SF)			
					(S300: E/305: Taiwan, E)
		**************			
					(Ref.No.4,000 Series)
		< CAPACITOR >			
C110	9-880-434-01	ELECT	270uF	250V	
					(HS-930SU)
C110	9-880-441-01	ELECT	120uF	400V	
					(HS-930SH)
C110	9-880-447-01	ELECT	270uF	400V	
					(HS-930SF)
C114	1-107-967-11	ELECT	1uF		400V
C211	1-111-087-11	ELECT	330uF		35V

Ref. No.	Part No.	Description		Remark
C212	1-126-947-11	ELECT	47uF	35V
C213	1-126-947-11	ELECT	47uF	35V
C214	1-126-947-11	ELECT	47uF	35V
C301	1-126-960-11	ELECT	1uF	50V
C311	1-111-087-11	ELECT	330uF	35V
C313	1-126-947-11	ELECT	47uF	35V
C314	1-126-948-11	ELECT	100uF	35V
C315	1-126-954-11	ELECT	10uF	50V
C411	1-126-947-11	ELECT	47uF	35V
C511	1-126-942-11	ELECT	1000uF	25V
C512	1-126-947-11	ELECT	47uF	35V
C513	1-126-947-11	ELECT	47uF	35V
C611	1-111-090-11	ELECT	560uF	35V
C612	1-126-947-11	ELECT	47uF	35V
		< DIODE >		
D101	8-719-064-12	DIODE S1NB60		
D102	8-719-100-77	DIODE RD18EB2 (HS-930SF/930SH)		
D104	8-719-109-57	DIODE RD2.4ESB2		
D105	9-980-073-01	DIODE 1CC270A		
D106	9-880-435-01	DIODE D1N60 (HS-930SU)		
D106	9-880-442-01	DIODE D1N60 (HS-930SH)		
D106	9-880-448-01	DIODE D1N60 (HS-930SF)		
D109	9-880-435-01	DIODE D1N60 (HS-930SU)		
D109	9-880-442-01	DIODE D1N60 (HS-930SH)		
D109	9-880-448-01	DIODE D1N60 (HS-930SF)		
D211	8-719-510-17	DIODE S2L20A		
D212	8-719-100-90	DIODE RD24EB2		
D311	8-719-500-50	DIODE D3S4M		
D312	9-980-073-01	DIODE 1CC270A		
D313	8-719-109-60	DIODE RD2.7ESB2		
D511	8-719-510-17	DIODE S2L20A		
D611	8-719-500-50	DIODE D3S4M		
		< FUSE >		
⚠F101	1-532-388-31	FUSE (2A) (HS-930SF/930SH)		
⚠F101	1-533-296-11	FUSE (2A) (HS-930SU)		
		< IC >		
IC301	8-759-420-19	IC AN1431T		
IC611	9-880-436-01	IC PQ3RD13 (HS-930SU)		
IC611	9-880-443-01	IC PQ3RD13 (HS-930SH)		
IC611	9-880-449-01	IC PQ3RD13 (HS-930SF)		
		< PROTECTOR >		
⚠P211	1-533-589-11	PROTECTOR (750mA)		
⚠P311	1-533-593-11	PROTECTOR (2A)		
⚠P312	1-533-589-11	PROTECTOR (750mA)		
⚠P511	1-533-589-11	PROTECTOR (750mA)		
		< PHOTO COUPLER >		
⚠PC101	8-749-010-59	PHOTO COUPLER TLP721F		
		< TRANSISTOR >		
Q101	9-880-437-01	TRANSISTOR 2SK2798 (HS-930SU)		
Q101	9-880-444-01	TRANSISTOR 2SK2798 (HS-930SH)		
Q101	9-880-450-01	TRANSISTOR 2SK2333 (HS-930SF)		
Q102	8-729-024-00	TRANSISTOR 2SC3377		

Ref. No.	Part No.	Description			Remark
Q103	9-880-437-01	TRANSISTOR	2SK2798 (HS-930SU)		
Q103	9-880-444-01	TRANSISTOR	2SK2798 (HS-930SH)		
Q103	9-880-450-01	TRANSISTOR	2SK2333 (HS-930SF)		
Q211	9-880-439-01	TRANSISTOR	2SJ488 (HS-930SU)		
Q211	9-880-445-01	TRANSISTOR	2SJ488 (HS-930SH)		
Q211	9-880-451-01	TRANSISTOR	2SJ488 (HS-930SU)		
Q311	8-729-921-42	TRANSISTOR	2SA1679		
Q312	8-729-920-69	TRANSISTOR	2SC1740		
Q511	8-880-440-01	TRANSISTOR	2SK2279 (HS-930SU)		
Q511	8-880-446-01	TRANSISTOR	2SK2279 (HS-930SH)		
Q511	8-880-452-01	TRANSISTOR	2SK2279 (HS-930SF)		
Q512	8-729-920-67	TRANSISTOR	2SA933S		
		< RESISITOR >			
R152	1-219-121-21	FUSIBLE	0.22	1/4W	

Ref. No.	Part No.	Description			Remark
*	A-6065-077-A	TK-47 BOARD, COMPLETE			
		**********************			
					(Ref.No.3,000 Series)
		< CAPACITOR >			
C001	1-164-232-11	CERAMIC CHIP	0.01uF		50V
C003	1-163-038-91	CERAMIC CHIP	0.1uF		25V
C004	1-163-038-91	CERAMIC CHIP	0.1uF		25V
C005	1-163-038-91	CERAMIC CHIP	0.1uF		25V
C006	1-126-205-11	ELECT CHIP	47uF	20%	6.3V
C007	1-163-235-11	CERAMIC CHIP	22PF	5%	50V
C008	1-163-235-11	CERAMIC CHIP	22PF	5%	50V
C009	1-163-235-11	CERAMIC CHIP	22PF	5%	50V
C010	1-163-235-11	CERAMIC CHIP	22PF	5%	50V
C011	1-164-232-11	CERAMIC CHIP	0.01uF		50V
C028	1-124-779-00	ELECT CHIP	10uF	20%	16V
C030	1-124-779-00	ELECT CHIP	10uF	20%	16V
C031	1-164-161-11	CERAMIC CHIP	0.0022uF	10%	100V
C032	1-124-779-00	ELECT CHIP	10uF	20%	16V
C033	1-164-161-11	CERAMIC CHIP	0.0022uF	10%	100V
C034	1-124-779-00	ELECT CHIP	10uF	20%	16V
C035	1-164-161-11	CERAMIC CHIP	0.0022uF	10%	100V
C036	1-124-779-00	ELECT CHIP	10uF	20%	16V
C037	1-163-009-11	CERAMIC CHIP	0.001uF	10%	50V
C038	1-164-161-11	CERAMIC CHIP	0.0022uF	10%	100V
C040	1-164-232-11	CERAMIC CHIP	0.01uF		50V
C042	1-163-989-11	CERAMIC CHIP	0.033uF	10%	25V
C043	1-163-135-00	CERAMIC CHIP	560PF	5%	50V
C046	1-163-018-00	CERAMIC CHIP	0.0056uF	5%	50V
C047	1-163-018-00	CERAMIC CHIP	0.0056uF	5%	50V
C050	1-107-725-11	CERAMIC CHIP	0.1uF	10%	16V
C051	1-107-725-11	CERAMIC CHIP	0.1uF	10%	16V
C052	1-164-232-11	CERAMIC CHIP	0.01uF		50V
C053	1-107-725-11	CERAMIC CHIP	0.1uF	10%	16V
C054	1-107-725-11	CERAMIC CHIP	0.1uF	10%	16V
C055	1-163-809-11	CERAMIC CHIP	0.047uF	10%	25V
C056	1-107-725-11	CERAMIC CHIP	0.1uF	10%	16V
C058	1-124-779-00	ELECT CHIP	10uF	20%	16V
C059	1-163-009-11	CERAMIC CHIP	0.001uF	10%	50V
C060	1-163-989-11	CERAMIC CHIP	0.033uF	10%	25V
C061	1-163-989-11	CERAMIC CHIP	0.033uF	10%	25V

The components identified by mark ⚠ or dotted line with mark ⚠ are critical for safety.
Replace only with part number specified.

Ref. No.	Part No.	Description			Remark
C062	1-124-779-00	ELECT CHIP	10uF	20%	16V
C064	1-124-779-00	ELECT CHIP	10uF	20%	16V
C065	1-109-982-11	CERAMIC CHIP	1uF	10%	10V
C066	1-164-232-11	CERAMIC CHIP	0.01uF		50V
C067	1-163-809-11	CERAMIC CHIP	0.047uF	10%	25V
C068	1-163-121-00	CERAMIC CHIP	150PF	5%	50V
C069	1-163-005-11	CERAMIC CHIP	470PF	10%	50V
C070	1-164-232-11	CERAMIC CHIP	0.01uF		50V
C071	1-126-205-11	ELECT CHIP	47uF	20%	6.3V
C072	1-163-038-91	CERAMIC CHIP	0.1uF		25V
C073	1-126-205-11	ELECT CHIP	47uF	20%	6.3V
C074	1-163-038-91	CERAMIC CHIP	0.1uF		25V
C075	1-163-038-91	CERAMIC CHIP	0.1uF		25V
C076	1-164-232-11	CERAMIC CHIP	0.01uF		50V
C077	1-126-205-11	ELECT CHIP	47uF	20%	6.3V
C078	1-163-038-91	CERAMIC CHIP	0.1uF		25V
C079	1-107-725-11	CERAMIC CHIP	0.1uF	10%	16V
C082	1-164-232-11	CERAMIC CHIP	0.01uF		50V
C083	1-163-009-11	CERAMIC CHIP	0.001uF	10%	50V
C084	1-164-232-11	CERAMIC CHIP	0.01uF		50V
C085	1-164-232-11	CERAMIC CHIP	0.01uF		50V
C096	1-163-038-91	CERAMIC CHIP	0.1uF		25V
C097	1-163-038-91	CERAMIC CHIP	0.1uF		25V
C098	1-164-232-11	CERAMIC CHIP	0.01uF		50V
C099	1-163-019-00	CERAMIC CHIP	0.0068uF	10%	50V
C100	1-164-232-11	CERAMIC CHIP	0.01uF		50V
C101	1-164-232-11	CERAMIC CHIP	0.01uF		50V
C102	1-164-232-11	CERAMIC CHIP	0.01uF		50V
C103	1-164-232-11	CERAMIC CHIP	0.01uF		50V
C104	1-126-205-11	ELECT CHIP	47uF	20%	6.3V
C105	1-164-232-11	CERAMIC CHIP	0.01uF		50V
C106	1-164-232-11	CERAMIC CHIP	0.01uF		50V
C107	1-126-205-11	ELECT CHIP	47uF	20%	6.3V
		< CONNECTOR >			
CN001	1-779-342-21	CONNECTOR, FFC/FPC 42P			
* CN002	1-695-154-11	SOCKET, CONNECTOR 18P			
CN004	1-580-055-21	PIN, CONNECTOR 2P			
CN005	1-784-326-11	CONNECTOR (FFC) 27P			
CN008	1-784-326-11	CONNECTOR (FFC) 27P			
		< DIODE >			
D003	8-719-421-27	DIODE MA728			
D004	8-719-104-34	DIODE 1S2836			
		< IC >			
IC004	8-759-701-39	IC NJM3404AM			
IC005	8-752-079-86	IC CXA2555Q-T4			
IC006	8-759-487-01	IC SSI33P3720A-CGT			
IC011	8-759-009-07	IC MC14053BFEL			
		< COIL >			
L002	1-412-031-11	INDUCTOR CHIP 47uH			
L003	1-412-031-11	INDUCTOR CHIP 47uH			
L004	1-412-031-11	INDUCTOR CHIP 47uH			
		< PHOTO INTERRUPTER >			
PH001	8-749-011-97	PHOTO INTERUPTER GP1S93			

Ref. No.	Part No.	Description			Remark
		< TRANSISTOR >			
Q001	8-729-420-24	TRANSISTOR	2SB1218A-QRS		
Q004	8-729-805-25	TRANSISTOR	2SB1121		
Q005	8-729-805-25	TRANSISTOR	2SB1121		
Q007	8-729-805-25	TRANSISTOR	2SB1121		
Q008	8-729-230-63	TRANSISTOR	2SC4116-YG		
Q009	8-729-015-76	TRANSISTOR	UN5211-TX		
Q010	8-729-230-63	TRANSISTOR	2SC4116-YG		
		< RESISTOR >			
R001	1-216-025-91	RES, CHIP	100	5%	1/10W
R002	1-208-757-11	RES, CHIP	91	0.50%	1/10W
R003	1-216-037-00	METAL CHIP	330	5%	1/10W
R005	1-216-089-91	RES, CHIP	47K	5%	1/10W
R013	1-216-089-91	RES, CHIP	47K	5%	1/10W
R015	1-216-073-00	METAL CHIP	10K	5%	1/10W
R016	1-216-001-00	METAL CHIP	10	5%	1/10W
R017	1-216-001-00	METAL CHIP	10	5%	1/10W
R049	1-216-154-00	RES, CHIP	15	5%	1/8W
R051	1-216-049-91	RES, CHIP	1K	5%	1/10W
R052	1-216-001-00	METAL CHIP	10	5%	1/10W
R053	1-216-041-00	METAL CHIP	470	5%	1/10W
R064	1-216-047-91	RES, CHIP	820	5%	1/10W
R066	1-216-035-00	METAL CHIP	270	5%	1/10W
R068	1-216-295-91	SHORT	0		
R070	1-216-097-91	RES, CHIP	100K	5%	1/10W
R072	1-216-097-91	RES, CHIP	100K	5%	1/10W
R073	1-216-075-00	METAL CHIP	12K	5%	1/10W
R075	1-216-109-00	METAL CHIP	330K	5%	1/10W
R077	1-216-001-00	METAL CHIP	10	5%	1/10W
R079	1-216-154-00	RES, CHIP	15	5%	1/8W
R084	1-216-121-91	RES, CHIP	1M	5%	1/10W
R090	1-216-089-91	RES, CHIP	47K	5%	1/10W
R091	1-216-073-00	METAL CHIP	10K	5%	1/10W
R092	1-216-037-00	METAL CHIP	330	5%	1/10W
R093	1-216-025-91	RES, CHIP	100	5%	1/10W
R094	1-216-073-00	METAL CHIP	10K	5%	1/10W
R095	1-216-073-00	METAL CHIP	10K	5%	1/10W
R100	1-216-049-91	RES, CHIP	1K	5%	1/10W
R101	1-216-081-00	METAL CHIP	22K	5%	1/10W
R102	1-216-081-00	METAL CHIP	22K	5%	1/10W
R103	1-216-049-91	RES, CHIP	1K	5%	1/10W
R104	1-216-081-00	METAL CHIP	22K	5%	1/10W
R105	1-216-109-00	METAL CHIP	330K	5%	1/10W
R111	1-216-073-00	METAL CHIP	10K	5%	1/10W
R112	1-216-113-00	METAL CHIP	470K	5%	1/10W
R113	1-216-057-00	METAL CHIP	2.2K	5%	1/10W
R149	1-216-073-00	METAL CHIP	10K	5%	1/10W
R150	1-216-081-00	METAL CHIP	22K	5%	1/10W
R151	1-216-065-91	METAL CHIP	4.7K	5%	1/10W
R152	1-216-077-00	METAL CHIP	15K	5%	1/10W
R153	1-216-093-00	METAL CHIP	68K	5%	1/10W
R154	1-216-081-00	METAL CHIP	22K	5%	1/10W
R155	1-216-081-00	METAL CHIP	22K	5%	1/10W
R156	1-216-091-00	METAL CHIP	56K	5%	1/10W
R157	1-216-091-00	METAL CHIP	56K	5%	1/10W
R158	1-216-093-00	METAL CHIP	68K	5%	1/10W
R159	1-216-081-00	METAL CHIP	22K	5%	1/10W
R160	1-216-089-91	RES, CHIP	47K	5%	1/10W
R161	1-216-097-91	RES, CHIP	100K	5%	1/10W

Ref. No.	Part No.	Description			Remark
R162	1-216-077-00	METAL CHIP	15K	5%	1/10W
R163	1-216-081-00	METAL CHIP	22K	5%	1/10W
R164	1-216-295-91	SHORT	0		
R165	1-216-295-91	SHORT	0		
R166	1-216-065-91	RES, CHIP	4.7K	5%	1/10W
R167	1-216-065-91	RES, CHIP	4.7K	5%	1/10W
R168	1-216-073-00	METAL CHIP	10K	5%	1/10W
R171	1-216-097-91	RES, CHIP	100K	5%	1/10W
R172	1-216-097-91	RES, CHIP	100K	5%	1/10W

< SWITCH >

Ref. No.	Part No.	Description
S001	1-771-046-11	SWITCH, PUSH LEVER

MISCELLANEOUS
****

Ref. No.	Part No.	Description
65	1-783-345-11	CABLE, FLAT (FML-5) (20P)
67	1-475-685-11	ENCODER, ROTARY
69	1-500-386-11	FILTER, CLAMP (FERRITE CORE) (S315)
104	1-783-348-11	CABLE, FLAT (FME-3) (9P) (S315)
105	1-783-339-11	CABLE, FLAT (FMT-21) (27P)
107	1-783-343-11	CABLE, FLAT (FMA-4) (25P)
108	1-783-353-11	CABLE, FLAT (FEA-2) (15P) (S315)
⚠110	1-777-850-51	CORD, POWER (US)
⚠110	1-777-851-41	CORD, POWER (E, Singapore)
⚠110	1-777-985-51	CORD, POWER (Taiwan)
⚠110	1-782-001-61	CORD, POWER (AEP, UK)
⚠110	1-782-692-31	CORD, POWER (Chinese)
113	1-500-386-11	FILTER, CLAMP (FERRITE CORE) (S315)
⚠207	8-820-005-02	OPTICAL PICK-UP KHS-180A/J1N
208	1-665-390-11	OP-15 FLEXIBLE BOARD
212	1-783-341-11	CABLE, FLAT (FMF-28) (8P)
M501	X-3947-137-1	MOTOR ASSY, SLED
M901	1-698-944-11	MOTOR, DC (SPINDLE)
M902	1-698-942-21	MOTOR (LOADING)
M903	X-3947-138-1	MOTOR ASSY, SKEW

****
HARDWARE LIST
****

Ref. No.	Part No.	Description
#1	7-685-648-79	SCREW +BVTP 3X12 TYPE2 TT (B)
#3	7-685-647-79	SCREW +BVTP 3X10 TYPE2 IT-3
#7	7-627-852-08	SCREW, PRECISION +P 1.7X2.5
#8	7-685-105-19	TPG +P 2X8, TYPE 2, NON-SLIT
#9	7-627-852-17	+P 1.7X4

ACCESSORIES & PACKING MATERIALS
****

Ref. No.	Part No.	Description
	1-475-686-51	COMMANDER, STANDARD (RMT-D103E) (S305)
	1-475-688-11	COMMANDER, STANDARD (RMT-D105A) (S300)
	1-475-688-21	COMMANDER, STANDARD (RMT-D105P) (S315)
⚠	1-569-008-11	ADAPTOR, CONVERSION 2P (E)
	1-575-334-11	CORD, CONNECTION (STEREO AV CABLE 1.5m) (EXCEPT S300: US)
	1-575-335-21	CORD, CONNECTION (S-VIDEO CABLE 1.5m)
⚠	1-770-019-11	ADAPTOR, CONVERSION PLUG 3P (UK)
	1-782-997-11	CORD, CONNECTION (STEREO AV S LINK CABLE 1.5m) (S300: US)
	3-709-044-01	LID, BATTERY CASE (for RMT-D103E/D105A/D105P)
	3-862-099-11	MANUAL, INSTRUCTION (ENGLISH) (S300: US)
	3-862-099-21	MANUAL, INSTRUCTION (ENGLISH, SPANISH) (S300: E)
	3-862-099-31	MANUAL, INSTRUCTION (ENGLISH, CHINESE) (S305)
	3-862-099-41	MANUAL, INSTRUCTION (ENGLISH, DANISH) (S315)
	3-862-099-51	MANUAL, INSTRUCTION (GERMAN, ITALIAN) (S315: AEP)
	3-862-099-61	MANUAL, INSTRUCTION (FRENCH, DUTCH) (S315: AEP)
	3-862-099-71	MANUAL, INSTRUCTION (SPANISH, PORTUGUESE) (S315: AEP)
	3-862-099-81	MANUAL, INSTRUCTION (SWEDISH, FINNISH) (S315: AEP)
*	3-979-558-01	CUSHION
*	3-988-076-01	INDIVIDUAL CARTON (S300: US)
*	3-988-076-11	INDIVIDUAL CARTON (S300: E)
*	3-988-076-21	INDIVIDUAL CARTON (S305: Chinese)
*	3-988-076-31	INDIVIDUAL CARTON (S305: Taiwan)
*	3-988-076-41	INDIVIDUAL CARTON (S305: E, Singapore)
*	3-988-077-01	INDIVIDUAL CARTON (S315)

The components identified by mark ⚠ or dotted line with mark ⚠ are critical for safety.
Replace only with part number specified.

9-921-680-11

Sony Corporation
Home A&V Products Company

98C0583-1
Printed in Japan © 1998. 3
Published by General Engineering Dept.
(Osaki East)